Brand of NTN corporation

Technical data

UCP317

Bearing units



Grey cast housing, radial insert ball bearing with socket set screws,seal with slinger

KIT CONTENT

UC317G2, P317

VISUAL (S)

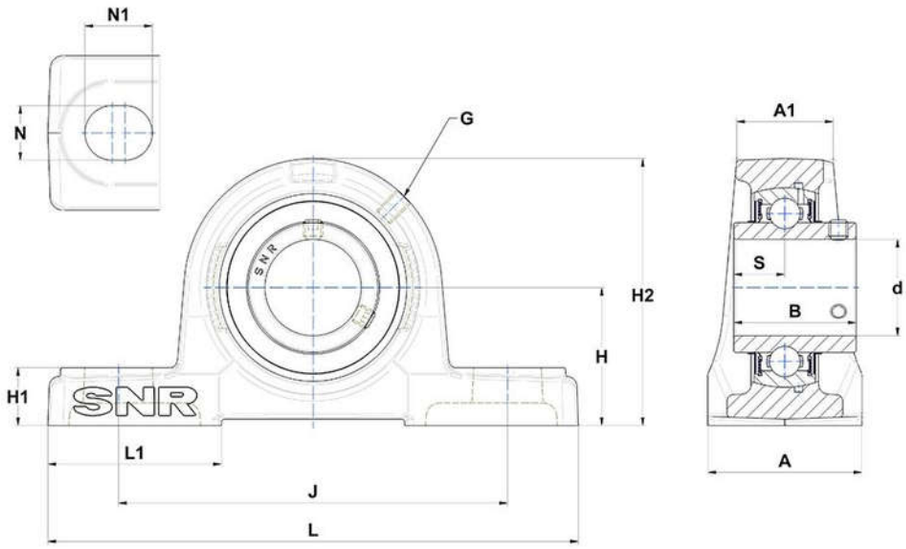

PRODUCT DEFINITION

Brand	SNR
A - Housing width	110 mm
A1 - Housing top width	69 mm
B - Width of Inner Ring	96 mm
d - Shaft diameter	85 mm
G - Grease fitting	M10x1

PRODUCT DEFINITION	
H - Distance mounting base to centerline spheric. seating diam.	112 mm
H1 - Housing foot height	40 mm
H2 - Housing height	220 mm
J - Mounting holes distance	320 mm
L - Housing length	420 mm
L1 - Housing foot length	120 mm
N - Mounting hole dimension	33 mm
N1 - Mounting hole length	45 mm
S - Distance front side/bearing centre	40 mm

PRODUCT PERFORMANCE	
C - Dynamic load rating	132600000 mN
C0 - Static load rating	96500000 mN
Operating temperature min.	253,15 °K
Operating temperature max.	373,15 °K

OTHER FEATURES	
Mass	21,24 kg
Recommended tightening torque for set screw	64 N-m