finder®
SWITCH TO THE FUTURE

Dimmers



Kitchen light control

Bedroom light control

Living room light control

Lighting control in corridors (for hotels, offices and hospitals)

15 SERIES

FINDER reserves the right to alter characteristics at any time without notice. FINDER assumes no liability for damage to persons or property, caused as a result of the incorrect use or application of its products.

"Master + Slave" system for dimming multiple lighting loads of either single or mixed lamp technologies

Type 15.10 "Master" - accepts input from a controlling push-button and outputs a dimming signal to a maximum of 32 x 15.11 slave dimmers, or other drivers or luminaires accepting a standardised 0-10 V/1-10 V signal
- Use with 4 wire connection
- "Soft" On and Off transitions
- Linear dimming
- Selectable operating modes with or without previous light level memory
- Staircase timer function

Type 15.11 "Slave" - accepts 1-10 V input from a 15.10 or other 0-10 V/1-10 V output device to dim a wide variety of lamps of different technology
- Selector switch for incandescent and halogen lighting loads (with or without transformer or electronic driver)
- Compatible with energy saving dimmable CFL or LED lamps and with all types of electromagnetic transformers
- Thermal protection against overload, thermo-fuse for extreme or short-circuit protection

Screw terminal

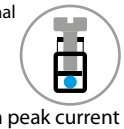

* Maximum peak current of the contact 30 A 230 V AC. Use a contactor or power relay to switch loads exceeding this value

For outline drawing see page 15

15.10



"Master" dimmer
- 0-10 V/1-10 V output to drive up to 32 x 15.11 slave dimmers or other similar devices
- Multi-function (with or without memory, including special "CFL with memory" function)
- Linear dimming
- Dimming speed setting
- Staircase timer function, with switch-off "early warning" signalled by lamps dimming
- 230 V AC supply, 50/60 Hz with automatic adjustment for frequency
- 6 A output relay contact*
- 17.5 mm wide, modular, 35 mm rail mount

15.11



"Slave" dimmer
- 1-10 V input, driven by 15.10 or by other 0-10 V/1-10 V output devices
- Maximum lamp load 400 W
- 100 W load with energy saving dimmable lamps (LED and CFL)
- Leading and trailing edge dimming methods
- "Transformer" function (for use with electromagnetic transformers)
- Minimum dimming level setting
- 17.5 mm wide, modular, 35 mm rail mount

		15.10	15.11
"Master Dimmer" output specifications			
Driving signal (Output mode automatically configures to match input mode of the connected Driver)		0-10 V, +35 mA max (Active current sourcing mode)	—
		1-10 V, –35 mA max (Passive current sinking mode)	—
Contact configuration	A	1 NO (6 A/230 V AC)*	—
"Slave Dimmer" output specifications			
Power max.	W	—	400
Power min.	W	—	3
Nominal lamp ratings:			
230 V incandescent or halogen	W	—	400 (1)
Toroidal electromagnetic transformers for LV halogen	W	—	400 (2)
E-core electromagnetic transformers for LV halogen	W	—	400 (2)
Electronic transformers (or ballasts) for LV halogen	W	—	400 (1)
Dimmable compact fluorescent (CFL)	W	—	100 (3)
Dimmable 230 V LED	W	—	100 (3) or (1)
Dimmable electronic transformers for LV LED	W	—	100 (1)
Supply specification			
Nominal voltage (U_N)	V AC (50/60 Hz)	110…230	230
Operating range		(0.8…1.1) U_N	(0.8…1.1) U_N
Stand-by power consumption	W	0.5	0.5
Dimming operating modes		—	Trailing edge (☼) Leading edge ( ) and ( )
Technical data			
Dimming speed (total dimming time)	s	1.5…10	—
Delay setting (staircase function)	min	0.5…20	—
Max no. of illuminated push-button (≤ 1 mA)		15	—
Ambient temperature range	°C	–10…+50	–10…+50 (4)
Protection category		IP 20	IP 20
Approvals (according to type)		CE	

Note
(1) Select "trailing edge" (☼) position on the front selector.
(2) Select "transformer" ( ) position on the front selector. Preferably, no more than 2 transformers.
(3) Select "leading edge" ( ) position on the front selector, and set the appropriate minimum dimming value (dependent on lamp type).
(4) With lamp load > 300 W (> 75 W for CFL or LED lamps), adequate ventilation must be provided - a gap of 9 mm on both side of the dimmer is suggested. Use the plastic separator type 022.09.

XII-2019, www.findernet.com

Electronic dimmers for lamps of various technologies. All compatible with the direct drive of Incandescent/halogen lamps and 230 V dimmable LED lamps
(Other lamps/drivers according to Type)

Type 15.91
- Mountable in wall box
- Leading edge dimming
- Linear dimming
- Automatically adjusts for supply frequency

Type 15.51
- Wall box or panel mount
- Trailing edge dimming
- Step or linear dimming
- Separate models for 50 and 60 Hz

Type 15.81
- 35 mm rail mount
- Leading or trailing edge dimming
- Also compatible with energy saving (CFL or LED) dimmable lamps and with most types of transformer/ballast drivers
- Linear dimming
- Automatically adjusts for supply frequency
- Thermo-fuse for extreme protection

- All Types suitable for incandescent and halogen lighting loads
- Use with 3 or 4 wire connection
- "Soft" On and Off transitions
- Two selectable operating modes: with or without previous light level memory
- Thermal protection against overload

Screw terminal



For outline drawing see page 15

	15.91	15.51	15.81
			
	• Suitable for residential wall box mounting • Maximum lamp load 100 W • Leading edge dimming • 2 modes - with or without memory • 230 V AC supply, 50/60 Hz (with automatic adjustment for frequency) • Linear dimming	• Suitable for wall box or panel mounting • Maximum lamp load 400 W • Trailing edge dimming • Step or Linear dimming • 2 modes - with or without memory • 230 V AC supply (separate models for 50 and 60 Hz)	• 17.5 mm modular, 35 mm rail mount • Maximum lamp load 500 W • Multi-function • Leading and trailing edge dimming methods (depending on the function) • Compatible with energy saving (CFL or LED) dimmable lamps and most types of transformer/ballast drivers • 230 V AC supply, 50/60 Hz (with automatic adjustment for frequency)
Output data			
Rated voltage V AC	230	230	230
Power max. W	100	400	500
Power min. W	3	10	3
Nominal lamp ratings:			
230 V incandescent or halogen W	100	400	500 (1)
Toroidal electromagnetic transformers for LV halogen W	—	300 (2)	500 (3)
E-core electromagnetic transformers for LV halogen W	—	—	500 (3)
Electronic transformers (or ballasts) for LV halogen W	—	400 (4)	500 (1)
Dimmable compact fluorescent (CFL) W	—	—	100 (5)
Dimmable 230 V LED W	50 (6)	50 (7)	100 (5)
Dimmable electronic transformers for LV LED W	50 (6)	50 (7)	100 (1)
Supply specification			
Nominal voltage (U_N) V AC (50/60 Hz)	230	230 (8)	230
Operating range	$(0.8…1.1)U_N$	$(0.8…1.1)U_N$	$(0.8…1.1)U_N$
Stand-by power consumption W	0.4	0.7	0.5
Dimming operating mode	Leading edge	Trailing edge	Trailing edge (☼) Leading edge (▯⊗) and (≋)
Technical data			
Ambient temperature range °C	–10…+50 (9)	–10…+50 (9)	–10…+50 (10)
Protection category	IP 20	IP 20	IP 20
Approvals (according to type)	CE EAC	CE EAC	CE EAC

Note
(1) Select "incandescent lamp" (☼) position on the front selector.
(2) One transformer only. Power-up only with the lamp load connected.
(3) Select "transformer" (▯⊗) position on the front selector. Preferably, no more than 2 transformers.
(4) One transformer only.
(5) Select "CFL" (≋) position on the front selector, and set the appropriate minimum dimming value (dependent on lamp type).
(6) Only if lamps or electronic transformers are compatible with leading edge method.
(7) Only if lamps or electronic transformers are compatible with trailing edge method.
(8) Specific 60 Hz version available (see ordering information).
(9) It is not recommended to mount more than one dimmer in the same wall box, unless adequate ventilation is provided or the lamp load is less than 100 W (15.51) or 50 W (15.91).
(10) With lamp load > 300 W (> 75 W for CFL or LED lamps), adequate ventilation must be provided - a gap of 9 mm on both side of the dimmer is suggested. Use the plastic separator type 022.09.

Not compatible with illuminated push-buttons.

XII-2019, www.findernet.com

YESLY Bluetooth Dimmers

Type 15.21
- Round wall box (ie: Ø 60mm) mounting

Type 15.71
- Wall mounting, compatible with most common Italian residential switch boxes: AVE, BTicino, Gewiss, Simon-Urmet, Vimar

- 7 functions, dependent on the load type
- Functions with or without memory
- Dimming operating mode Trailing edge or Leading edge
- Linear/exponential regulation
- Suitable for dimmable LED lamps, dimmable CFL lamps, halogen lamps, transformers or electronic power supplies
- Transmission range: approximately 10 m in free space and without obstacles
- "Soft" switching ON/OFF
- Over-temperature and short-circuit protection

Screw terminal



NEW **15.21**

YESLY



- Transmission protocol Bluetooth 4.2 Low Energy
- 128 bit encrypted connection
- Configurable via Finder TOOLBOX App - compatible with iOS and Android operating systems
- Can be controlled through standard pushbuttons, BEYON or 013.B9 wireless pushbuttons
- Maximum dimmable power300 W
- Status LED

NEW **15.71**

YESLY



- Transmission protocol Bluetooth 4.2 Low Energy
- 128 bit encrypted connection
- Configurable via Finder TOOLBOX App - compatible with iOS and Android operating systems
- Can be controlled through standard pushbuttons, BEYON or 013.B9 wireless pushbuttons
- Maximum dimmable power 200 W
- Status LED

For outline drawing see page 15

Output data			
Rated voltage	V AC	230	230
Power max.	W	300	200
Power min.	W	3	3
Nominal lamp ratings:			
230 V incandescent or halogen	W	300	200
Toroidal electromagnetic transformers for LV halogen	W	300	200
E-core electromagnetic transformers for LV halogen	W	300	200
Electronic transformers (or ballasts) for LV halogen	W	300	200
Dimmable compact fluorescent (CFL)	W	150	100
Dimmable 230 V LED	W	150	100
Dimmable electronic transformers for LV LED	W	300	200
Supply specification			
Nominal voltage (U_N)	V AC	230	230
Operating range		(0.8…1.1) U_N	(0.8…1.1) U_N
Stand-by power consumption	W	0.4	0.4
Technical data			
Dimming operating mode		Trailing edge / Leading edge	Trailing edge / Leading edge
Ambient temperature range	°C	–10…+50	–10…+50
Protection category		IP 20	IP 20
Approvals (according to type)		CE	CE

KNX Universal Dimmer with 2 channels

- 2 x 400W channels
- LED indicators for each channel
- Thermal protection and short-circuit protection
- Manual override through front panel
- Scenario Management
- Power supply via KNX bus
- 35 mm rail (EN 60715) mounting
- Suitable for ETS 4 (or latest versions)

Screw terminal



NEW **15.2K.8.230.0400**



- Dimming operating modes: Leading Edge or Trailing Edge, ETS configurable
- Suitable for many kind of loads: LED lamps, halogen, CFL, electronic and electromagnetic transformers

For outline drawing see page 14

Output data		
Rated voltage	V	230
Power max.	W	400
Power min.	W	2
Nominal lamp ratings 230 V:		
230 V incandescent or halogen	W	400
Toroidal electromagnetic transformers for LV halogen	W	400
E-core electromagnetic transformers for LV halogen	W	400
Electronic transformers (or ballasts) for LV halogen	W	400
Dimmable compact fluorescent (CFL)	W	100
Dimmable 230 V LED	W	100
Dimmable electronic transformers for LV LED	W	100
Dimming operating modes		Leading Edge / Trailing Edge
Supply specification		
Type of BUS		KNX
Supply voltage	V DC	30
Rated consumption	mA	7
Technical data		
Ambient temperature range	°C	–5…+45
Protection category		IP 20
Approvals (according to type)		CE

Ordering information

Example: type 15.71, YESLY Bluetooth dimmer, 230 V AC.

1 5	.	7	1	.	8	.	2 3 0	.	B	2	0	0
Series		Type	No. of poles		Supply version		Supply voltage		Transmission protocol	Output power	AC input frequency	

Series

Type
1 = Master / slave, 35 mm rail (EN 60715) mount, 17.5 mm wide
2 = YESLY - round wall box mounting
2 = Mounting on 35 mm rail (EN 60715), with 2 outputs (15.2K)
5 = Panel or wall box mount
7 = YESLY - wall mounting residential switch boxes like AVE, Bticino, Gewiss, Simon-Urmet, Vimar
8 = 35 mm rail (EN 60715) mount, 17.5 mm wide, for energy saving lamps
9 = Wall box mount, for LED lamps

No. of poles
0 = 0-10 V output (only for 15.10)
1 = 1 output
K = KNX interface dimmer

Supply version
8 = AC

Supply voltage
230 = 230 V
230 = 110…230 V (only for 15.10)

Transmission protocol
B = Bluetooth 4.2 Low Energy (BLE)
0 = Standard

Output power
0 = 100 W (15.91)
2 = 200 W (15.71)
3 = 300 W (15.21)
4 = 400 W (15.51,15.11, 15.2K)
5 = 500 W (15.81)

AC input frequency
0 = 50 Hz (15.51) 50/60 Hz (15.11/71/81/91)
1 = 50/60 Hz (15.10)
6 = 60 Hz (15.51)

0 = Standard
0 = Type 15.71 white
2 = Type 15.71 anthracite gray
4 = Only for 15.51 linear dimming

Available Codes
15.10.8.230.0010 master dimmer, 50/60 Hz
15.11.8.230.0400 slave dimmer, 50/60 Hz
15.21.8.230.B300 YESLY BLE Dimmer - 300 W, White
15.51.8.230.0400 step dimming, 50 Hz
15.51.8.230.0404 linear dimming, 50 Hz
15.51.8.230.0460 step dimming, 60 Hz
15.71.8.230.B200 YESLY BLE Dimmer - 200 W, White
15.71.8.230.B202 YESLY BLE Dimmer - 200 W, Anthracite
15.81.8.230.0500 linear dimming, 50/60 Hz
15.91.8.230.0000 linear dimming, 50/60 Hz
15.2K.8.230.0400 KNX universal Dimmer

Technical data

EMC specifications

Type of test		Reference standard	15.51/15.91	15.10/11/81	15.21/15.71	15.2K
Electrostatic discharge	contact discharge	EN 61000-4-2	4 kV		4 kV	4 kV
	air discharge	EN 61000-4-2	8 kV		8 kV	8 kV
Radiated electromagnetic field	(80…1000 MHz)	EN 61000-4-3	3 V/m	10 V/m	10 V/m	3 V/m
Fast transients (burst)	on supply terminals	EN 61000-4-4	4 kV		2 kV	4 kV
(5-50 ns, 5 and 100 kHz)	on pushbutton connection	EN 61000-4-4	4 kV		4 kV	—
Voltage pulses on supply terminals (surge 1.2/50 µs)	differential mode	EN 61000-4-5	2 kV		2 kV	2.5 kV
Radiofrequency common	on supply terminals	EN 61000-4-6	3 V		10 V	3 V
mode voltage (0.15…80 MHz)	on pushbutton connection	EN 61000-4-6	3 V		10 V	—
Voltage dips	70% U_N, 40% U_N	EN 61000-4-11	10 cycles		10 cycles	10 cycles
Short interruptions		EN 61000-4-11	10 cycles		10 cycles	10 cycles
Radiofrequency conducted emissions	0.15…30 MHz	EN 55015	class B		—	class B
	0.15…30 MHz	EN 55015 / ETSI EN 301489-1/ 301489-17	—		class B	—
Radiated emissions	30…1000 MHz	EN 55015	class B		—	class B
	30…6000 MHz	ETSI EN 301489-1/ 301489-17	—		class B	—

Terminals		15.10/15.11/15.51/15.71/ 15.81/15.91		15.21		15.2K	
Max. wire size		solid cable	stranded cable	solid cable	stranded cable	solid cable	stranded cable
	mm^2	1 x 6 / 2 x 4	1 x 4 / 2 x 2.5	1 x 2.5 / 2 x 1.5	1 x 2.5 / 2 x 1	1 x 6 / 2 x 2.5	1 x 4 / 2 x 1.5
	AWG	1 x 10 / 2 x 12	1 x 12 / 2 x 14	1 x 14 / 2 x 16	1 x 14 / 2 x 16	1 x 10 / 2 x 14	1 x 12 / 2 x 16
Screw torque	Nm	0.8		0.5		0.5	
Wire strip length	mm	9				7	

Other data			15.10	15.11	15.21	15.51	15.71	15.81	15.91	15.2K
Power lost to the environment	without load	W	0.5	0.5	0.4	0.7	0.4	0.5	0.4	—
	with rated load	W	1.7	2.5	2.5	2.2	2	2.6	1.2	—
Max cable length for push-button connection		m	100	100	100	100	100	100	100	—
Max cable length for Master and Slaves connection		m	100 (keep separate from power cables)							

Types 15.10 and 15.11

Signaling

LED (15.10 only)	Condition
	Stand-by, output voltage < 1 V
	Active, output voltage ≥ 1 V
	Timing, staircase function

LED (15.11 only)	Condition
	Stand-by, input voltage < 1 V
	Active, input voltage ≥ 1 V
	Short circuit or overload, output disabled
	Overtemperature, output disabled

Functions

Type	Linear dimming	
15.10	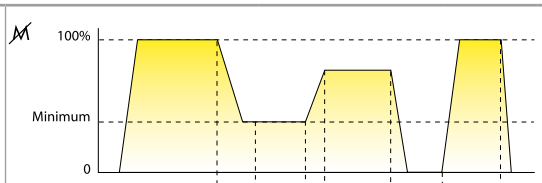	**Operating mode without memory:** at switch-off, the light level is not memorized. **Long control pulse:** The light level is progressively raised or lowered in linear way. The lowest value depending on the "minimum dimming level" regulator setting (on 15.11). **Short control pulse:** Alternately switches between On and Off (maximum light level and the off state).
	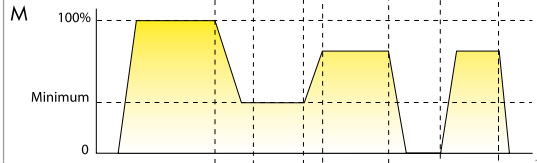	**Operating mode with memory:** the previous light level is memorized. **Long control pulse:** The light level is progressively raised or lowered in linear way. The lowest value dependent on the "minimum dimming level" regulator setting (on 15.11). **Short control pulse:** Alternately switches between On and Off. When switching On, the light level assumes the value set during the previous On state.
	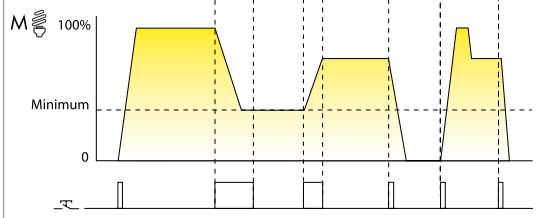	**Operating mode with memory:** the previous light level is memorized, specific for CFL Lamp. **Long control pulse:** The light level is progressively raised or lowered in linear way. The lowest value dependent on the "minimum dimming level" regulator setting (on 15.11). **Short control pulse:** Alternately switches between On and Off. When switching On, the light level reach the full value for a very short time (in order to guarantee the correct lamp turn-on), then immediately assumes the value set during the previous On state.
	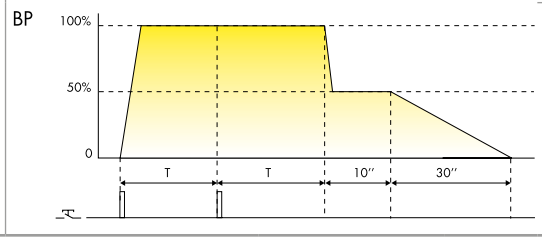	**Staircase relay with early warning** On initial impulse the output closes and the timing starts for the pre-set duration. After the timing period (T), the output power is reduced to 50% for 10 seconds; then in the last 30 seconds it will be further reduced to the final shutdown. During the pre-set and 40 seconds warning time, it is possible, by a further impulse, to extend the time by the full pre-set value.

Type of load - Type 15.11

Type of load	Selector setting	Regulator setting
• Incandescent lamps • 230 V halogen lamps • 12/24 V halogen and LED lamps with electronic transformer/ballast	(Trailing Edge)	It is suggested to set the "minimum dimming level" at the lowest value, so that the complete dimming range is available. But if it is necessary to avoid too low a level of illumination, a higher value can be set. 
• Dimmable compact fluorescent lamps (CFL) • Dimmable LED lamps	(Leading Edge)	It is suggested to initially set the "minimum dimming level" at an intermediate value and then if necessary, readjust for a level found to be compatible with the lamp being used. 
• 12/24 V halogen lamps with toroidal or E-core electromagnetic transformer	(Leading Edge)	It is suggested to set the "minimum dimming level" at the lowest value, so that the complete dimming range is available. But if it is necessary to avoid too low a level of illumination, a higher value can be set. 

XII-2019, www.findernet.com

Type 15.51 and 15.91

Functions

Type	Step dimming
15.51…0400	**Operating mode 1 (with memory):** the previous light level is memorized. 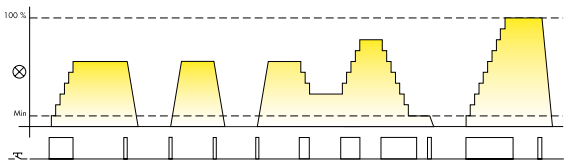 **Long control pulse:** The light level is progressively raised or lowered through a maximum of 10 incremental steps. **Short control pulse:** Alternately switches between On and Off. When switching On, the light level assumes the value set during the previous On state.
	Operating mode 2 (without memory): on switch off, the light level is not memorized. 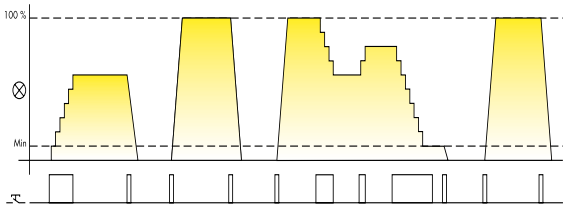 **Long control pulse:** The light level is progressively raised or lowered through a maximum of 10 incremental steps. **Short control pulse:** Alternately switches On or Off between the maximum light level and the off state.

Type	Linear dimming
15.51…0404 15.91…0000	**Operating mode 3 (with memory):** the previous light level is memorized. 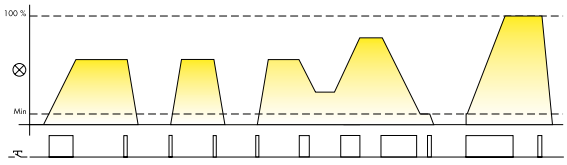 **Long control pulse:** The light level is progressively raised or lowered. **Short control pulse:** Alternately switches between On and Off. When switching On, the light level assumes the value set during the previous On state.
	Operating mode 4 (without memory): on switch off, the light level is not memorized. 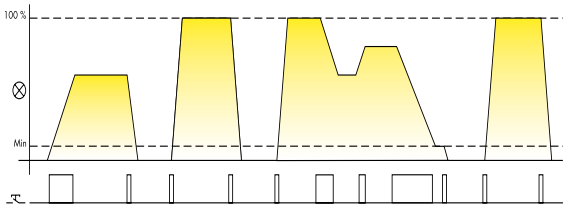 **Long control pulse:** The light level is progressively raised or Lowered. **Short control pulse:** Alternately switches On or Off between the maximum light level and the off state.

Operating mode setup

Type 15.51

On 15.51 operating mode 1 or 3 (with memory) is preset, but it is possible to change it using the following sequence:
a) remove the supply voltage;
b) press the control button;
c) apply the supply to the relay, keeping the button closed for 3 second;
d) on button release, the light will flash twice to indicate the selection of operating mode 2 or 4, or flash once for operating mode 1 or 3.
Repeating the above steps will alternately change between operating modes.

Type 15.91

On 15.91 operating mode 4 (without memory) is preset, but it is possible to change it using the following sequence:
a) remove the supply voltage;
b) press the control button;
c) apply the supply to the relay, keeping the button closed for 3 second;
d) on button release, the light will flash twice to indicate the selection of operating mode 3, or flash once for operating mode 4.
Repeating the above steps will alternately change between operating modes.

Type 15.81

Thermal protection and signaling

LED (15.81 type only)	Supply voltage	Thermal protection
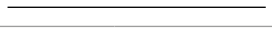	OFF	—
	ON	—
	ON	ALARM

ALARM
The internal thermal protection (active on all dimmer types) will detect an unsafe temperature, due to overload or incorrect installation, and will turn the dimmer output off.
It is possible to turn the dimmer on, by push button, only when the temperature reduces to a safe level (after 1 to 10 minutes, depending on installation conditions) and after removing the cause of the overload.

Functions

Type **Linear dimming**

15.81...0500

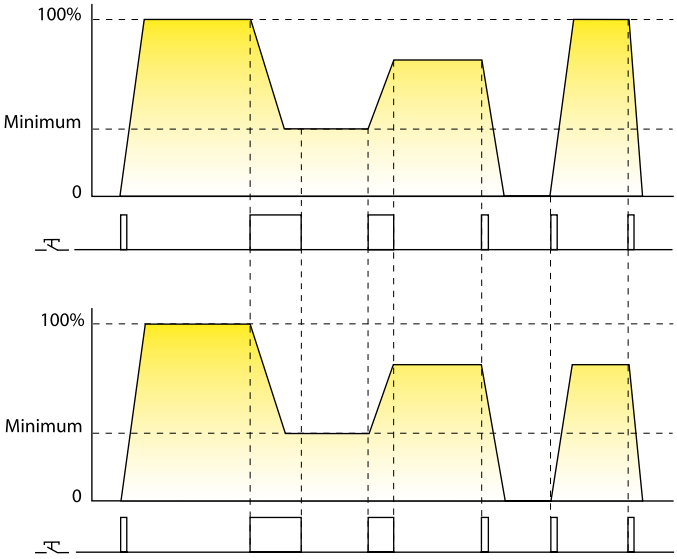

Operating mode without memory: at switch-off, the light level is not memorized.

Long control pulse: The light level is progressively raised or lowered in linear way. The lowest value depend on the "minimum dimming level" regulator setting.

Short control pulse: Alternately switches between On and Off between the maximum light level and the off state.

Operating mode with memory: the previous light level is memorized.

Long control pulse: The light level is progressively raised or lowered in linear way. The lowest value dependent on the "minimum dimming level" regulator setting.

Short control pulse: Alternately switches between On and Off. When switching On, the light level assumes the value set during the previous On state.

Type of load	Selector setting		Regulator setting	
	With memory (M)	Without memory (M)		
• Incandescent lamps • 230 V halogen lamps • 12/24 V halogen lamps with electronic transformer/ballast	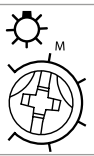	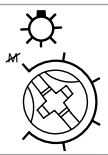	It is suggested to set the "minimum dimming level" at the lowest value, so that the complete dimming range is available. But if it is necessary to avoid too low a level of illumination, a higher value can be set.	
• Dimmable compact fluorescent lamps (CFL) • Dimmable LED lamps	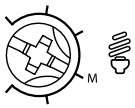	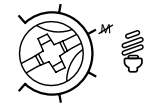	It is suggested to initially set the "minimum dimming level" at an intermediate value and then if necessary, readjust for a level found to be compatible with the lamp being used.	
• 12/24 V halogen lamps with toroidal or E-core electromagnetic transformer	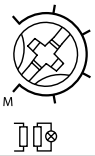	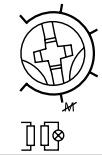	It is suggested to set the "minimum dimming level" at the lowest value, so that the complete dimming range is available. But if it is necessary to avoid too low a level of illumination, a higher value can be set.	

Leading edge dimming

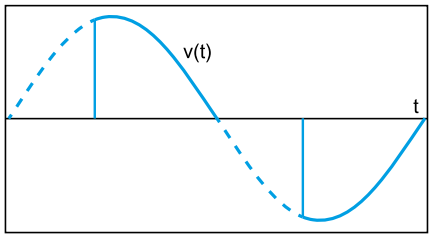

Trailing edge dimming

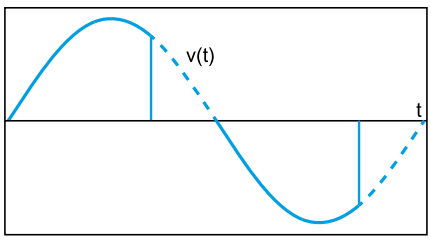

Light dimming is realized with "phase cutting technology", which works by "cutting off" part of the mains voltage waveform in order to reduce the RMS voltage fed to the lamp. When the "cut off" part is at the beginning of each half cycle the dimming method is called Leading Edge. When it is towards the end of each half cycle, it is called Trailing Edge. These 2 methods are suitable for dimming different lamp types: Trailing Edge is, in general, more suitable for electronic transformers for low voltage lamps (halogen or LED). Leading Edge is better suited for electromagnetic transformers for LV lamps, 230 V CFL and 230 V LED lamps. Both methods are, however, suitable for dimming 230 V halogen and incandescent lamps.
In consideration of the different lamp types actually available on the market, it is suggested to refer to the technical specification indicated in page 3 and, if given, to the lamp manufacturer's recommendation.

XII-2019, www.findernet.com

Types 15.21 and 15.71

Dimmer setting

The dimming function can be set via Finder TOOLBOX App, available for iOS and Adroid systems.
This product is ready-to-use with the factory setting: 1 – LEDRC1; Trailing edge linear control curve.

Functions

Settable via App.

Load type	Function	Driving method	Control curve
LED lamps, Halogen, electronic transformers LED	1	**TE** Trailing Edge	Linear 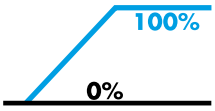
	2	**LE** Leading Edge	
LED LED	3	**TE** Trailing Edge	Exponential 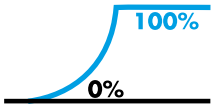
	4	**LE** Leading Edge	
CFL lamps	5	**TE** Trailing Edge	Exponential 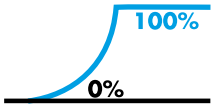
	6	**LE** Leading Edge	
Electromechanical transformers	7	**LE** Leading Edge	Linear 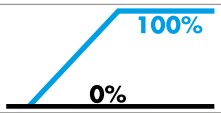
AUTO	**AUTOMATIC**		

AUTO: the automatic function verifies with a special algorithm the driving method (Trailing edge or Leading edge) best suited to the applied load. If the AUTO function is selected, the dimmer carries out a check switching on the load with two working cycles each time the dimmer is powered from the L & N (even after a blackout). These cycles allow the dimmer to set the right driving method.
Control curve: the Linear or Exponential control curve is useful in achieving the most visually appealing change in light intensity - according to the type of load being used.

Parameters

Settable via Finder TOOLBOX App.
Minimum light value: Minimum value of load intensity.
Switch time: Switching ON/OFF time.
Regulation time: Time to reach the highest or lower light value.
Scene time: Reaching the value recalled by a scenario.
Memory: Remembers the brightness value before power off.
Restore after blackout: Restoring the light intensity to the value prior to a loss of power.

Wiring diagrams - Types 15.10 and 15.11

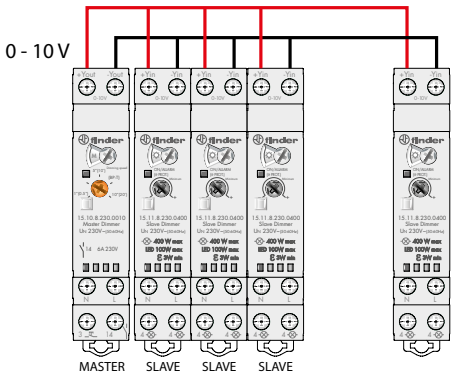

This new system is modular, adaptable to every need and allows control of multiple lamps through a single control device called the "Master Dimmer" Type 15.10.8.230.0010.
The Master Dimmer, produces a 0 - 10 V signal proportional to the dimming value needed:
0 V corresponds to 0% (light off); 5 V equals 50%, 10 V corresponds to the maximum brightness (100% on).
The 0 - 10 V output signal terminals Yout + / Yout of the "Master Dimmer" must be connected to terminals + Yin / Yin of one or more 15.11.8.230.0400, called the "Slave Dimmers", which have the task of changing the voltage applied to the lamps and therefore their brightness.

The result is a flexible system that offers a range of solutions from the minimum configuration of a Master Dimmer and a Slave Dimmer, up to the maximum configuration of a Master Dimmer and 32 Slave Dimmers.
Each slave can drive a different lamp type, depending on the appropriate methodology, "Leading Edge" or "Trailing Edge". It can regulate halogen lamps, dimmable LED lamps, dimmable CFL lamps, electronic transformers, and electromagnetic transformers.
For example, one Master Dimmer can control a Slave Dimmer with LED lamps and at the same time a second Slave Dimmer with halogen lamps, and a third with electronic transformers.

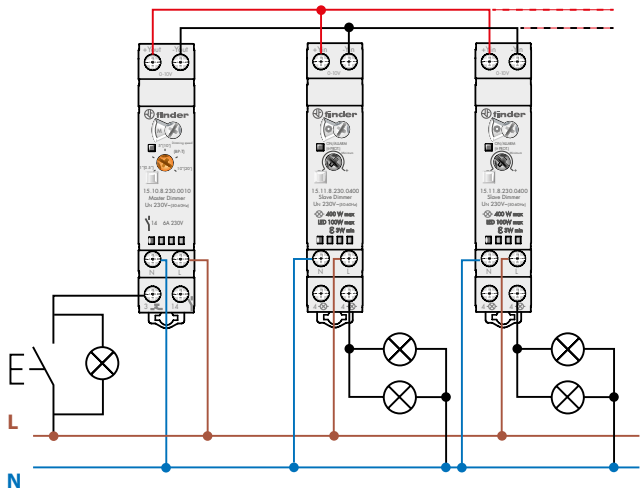

MASTER DIMMER TYPE 15.10 AND SLAVE DIMMER TYPE 15.11
It is recommended that the Master controls from one to a maximum of 32 Slave units.
The push-buttons (including illuminated push-buttons Max. 15) serve as the ON / OFF (momentary push), or when pressed for a longer time they adjust the brightness level.
Each Slave can drive a different load type.

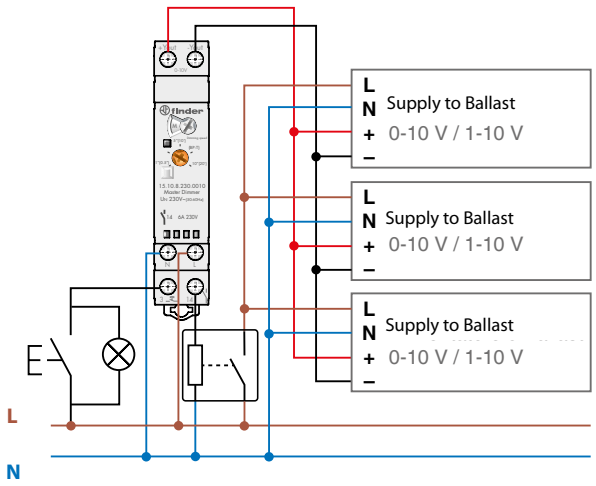

MASTER DIMMER + 0 - 10 V ELECTRONIC TRANSFORMER OR BALLAST
Using only the Master Dimmer it is possible to control electronic transformers or ballasts with a 0 - 10 V / 1 - 10 V input (observing correct polarity).
For 1 - 10 V applications it is suggested to supply the Ballast Live from terminal 14. This will ensure that the supply to the Ballast is cut-off for a signal < 1 V.
Note: Check that the maximum Peak Current of the Ballast does not exceed the 30 A 230 V AC rating of terminal 14. Use a contactor or power relay to switch loads exceeding this value.

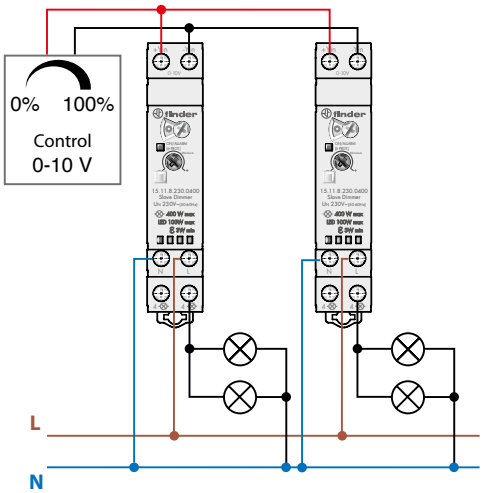

BMS 0 - 10 V OUTPUTS + SLAVE DIMMERS
In the case of Home Automation or Building Automation systems you can use just the Slave Dimmer Type 15.11 directly controlled by the 0 - 10 V output of the building management system (BMS), or by 0 - 10 V rotary regulators.

XII-2019, www.findernet.com

Wiring diagrams - Types 15.21, 15.51, 15.71, 15.81 and 15.91

Note: remember to maintain a ground/earth connection for class 1 light fittings.

Type 15.51 - 3 wire connection

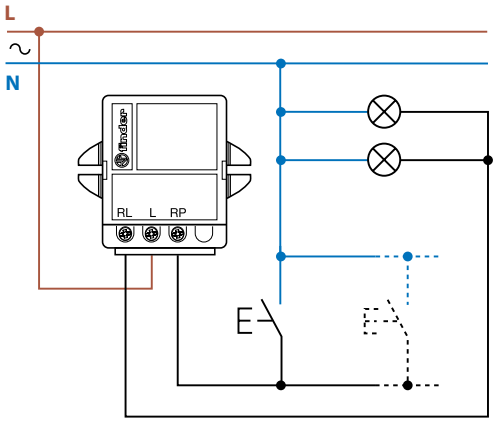

Type 15.51 - 4 wire connection

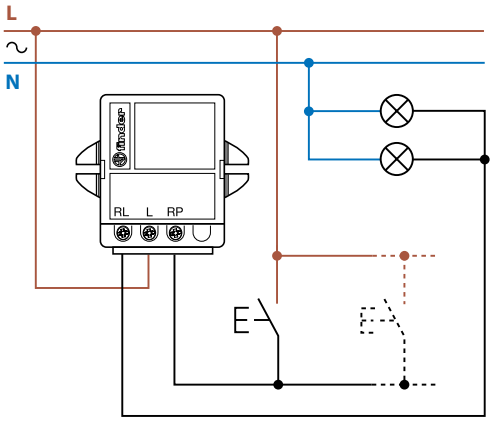

Type 15.91 - 3 wire connection

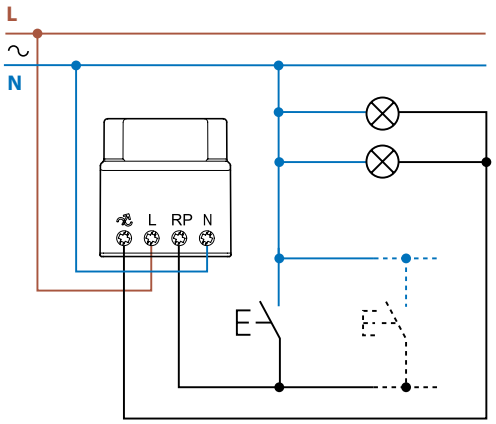

Type 15.91 - 4 wire connection

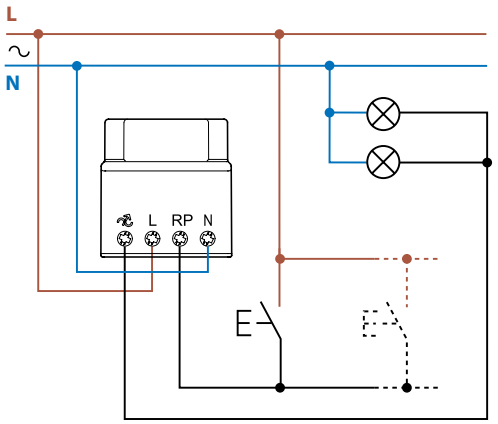

Type 15.81 - 3 wire connection

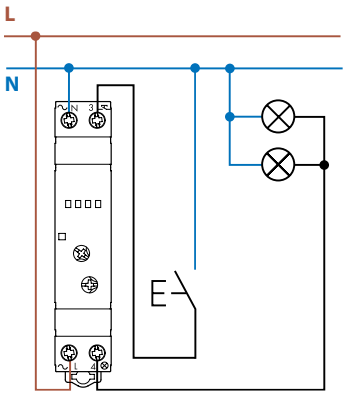

Type 15.81 - 4 wire connection

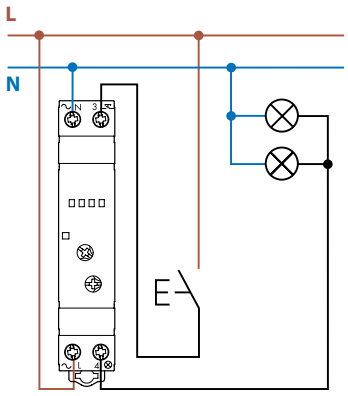

Type 15.71 - 4 wire connection

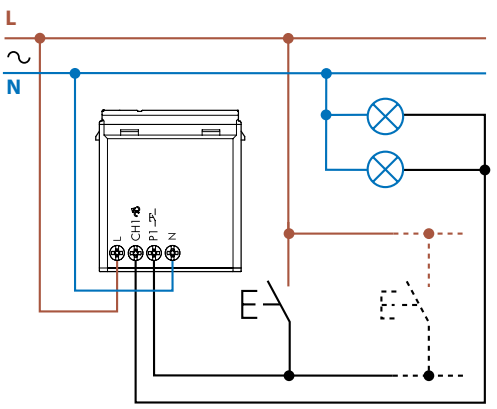

Type 15.21 - 4 wire connection

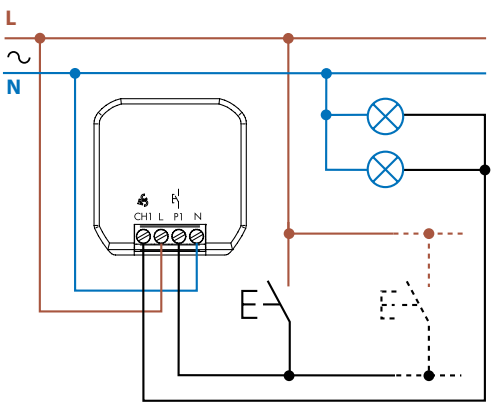

Wiring diagram - Type 15.2K

Type 15.2K

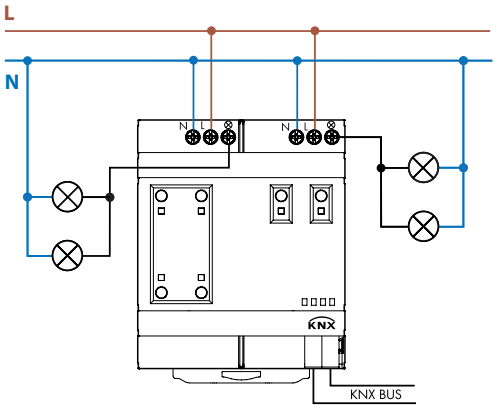

Outline drawings

Type 15.2K
Screw terminal

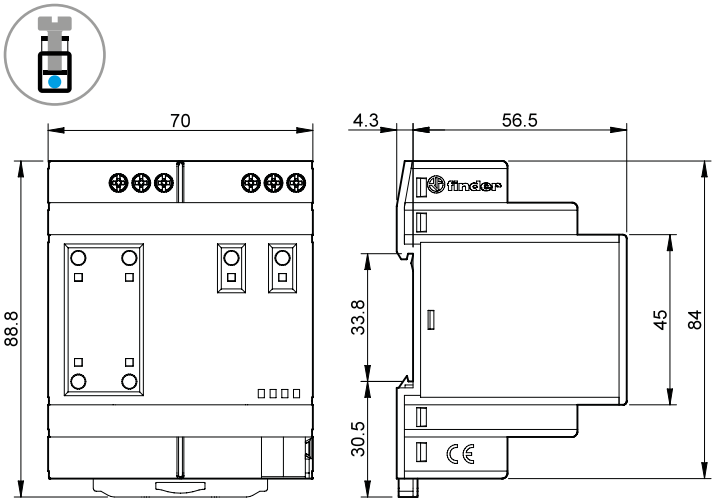

XII-2019, www.findernet.com

Outline drawings

Type 15.51
Screw terminal

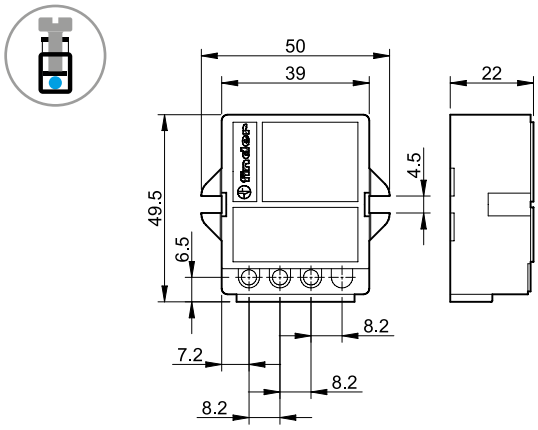

Type 15.91
Screw terminal

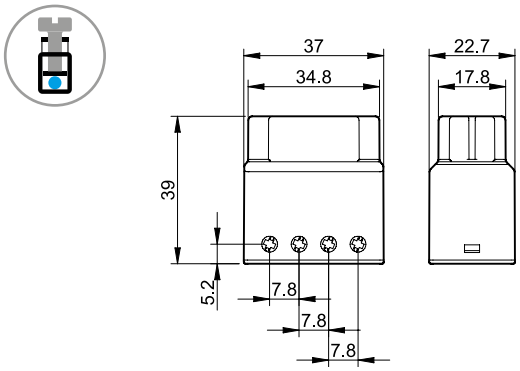

Type 15.10
Screw terminal

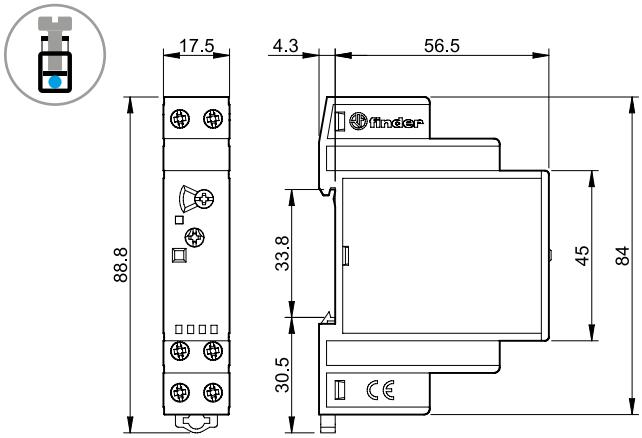

Type 15.11
Screw terminal

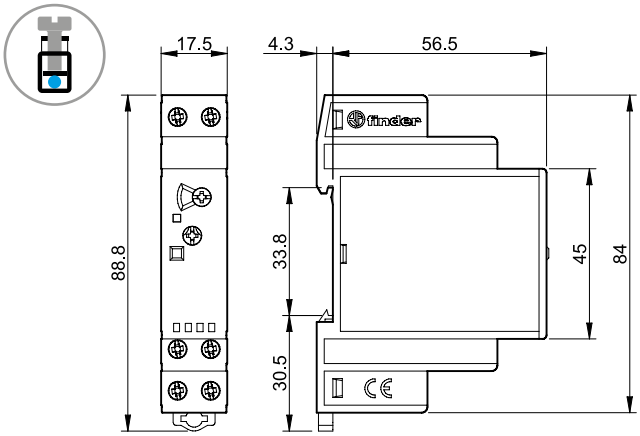

Type 15.81
Screw terminal

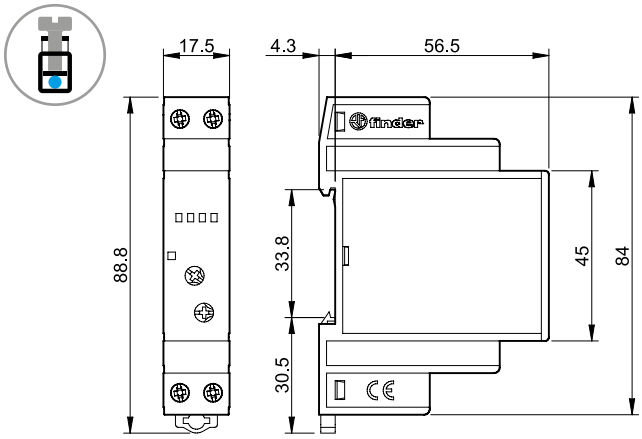

Type 15.71 - YESLY
Screw terminal

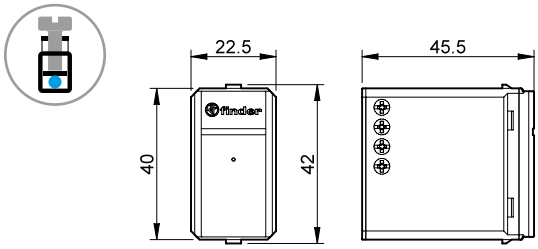

Type 15.21 - YESLY
Screw terminal

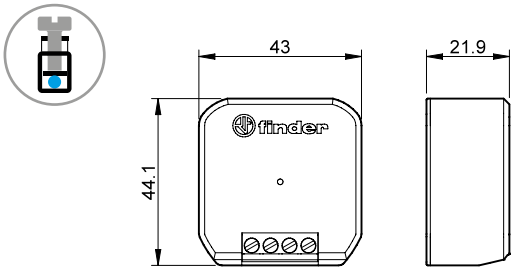

Accessories



020.01

Adaptor for panel mounting for types 15.10, 15.11 and 15.81, plastic, 17.5 mm wide — 020.01

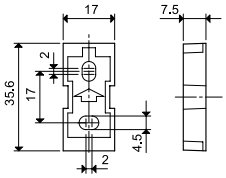



022.09

Separator for rail mounting, plastic, 9 mm wide for types 15.10, 15.11 and 15.81 — 022.09

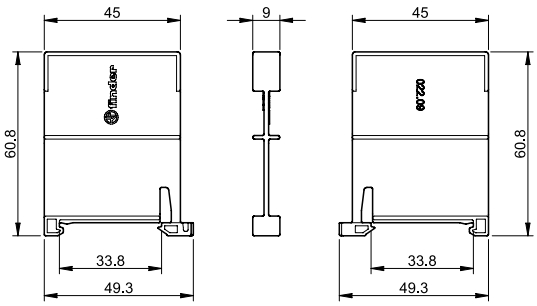

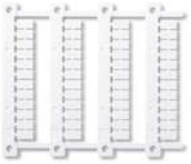

060.48

Sheet of marker tags for types 15.10, 15.11 and 15.81, plastic, 48 tags, 6 x 12 mm — 060.48

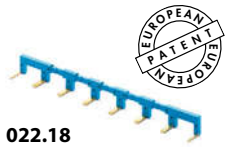

022.18

8-way jumper link for type 15.10 and 15.11 connection, 17.5 mm wide	022.18 (blue)
Rated values	10 A - 250 V

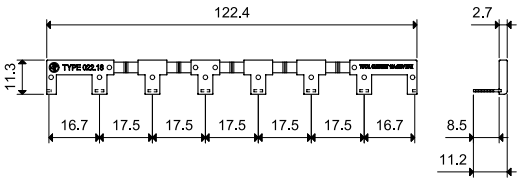

I

Please see general technical information

XII-2019, www.findernet.com