SCHAEFFLER

Cylindrical roller bearings NJ205-E-XL-TVP2 (Series NJ2..-E)

main dimensions to DIN 5412-1, semi-locating bearing, separable, with cage

The datasheet is only an overview of dimensions and basic load ratings of the selected product. Please always observe all the guidelines in these overview pages. Further information is given on many products under the menu item "Description". You can also order comprehensive information via the Catalogue selection system (https://www.schaeffler.de/content.schaeffler.de/en/news_media/index.jsp) or by telephone on +49 (91 32) 82 - 28 97.

d	25	mm
D	52	mm
B	15	mm
D_1	43,8	mm
d_1	34,7	mm
$D_{a\ max}$	46	mm
$d_{a\ max}$	31	mm
$d_{a\ min}$	29	mm
$d_{c\ min}$	37	mm
E	46,5	MM
F	31,5	mm

$r_{1\ min}$	0,6 mm	
$r_{a\ max}$	1 mm	
r_{min}	1 mm	
s	1,2 mm	Axial displacement facility from central position

	HJ205-E	Designation, L-section ring
m	0,14 kg	Mass
C_r	34500 N	Basic dynamic load rating, radial
C_{0r}	27500 N	Basic static load rating, radial
C_{ur}	4450 N	Fatigue limit load, radial
n_G	17200 1/min	Limiting speed
$n_{\vartheta r}$	11600 1/min	Reference speed

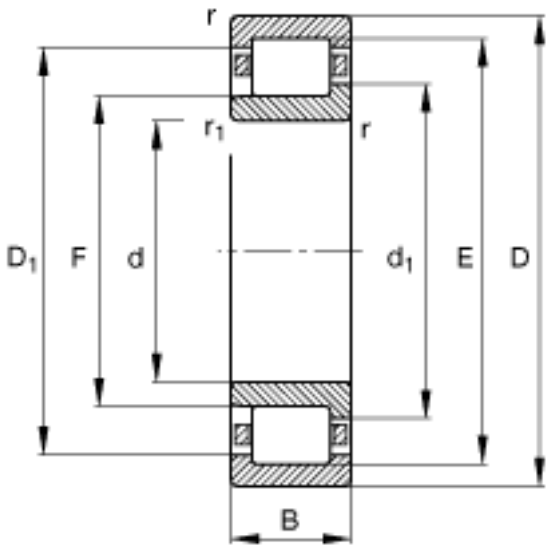
r
r1
r
D1
F
d
d1
E
D
B

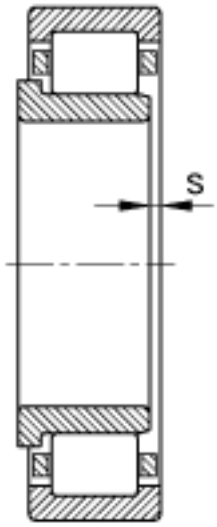
S

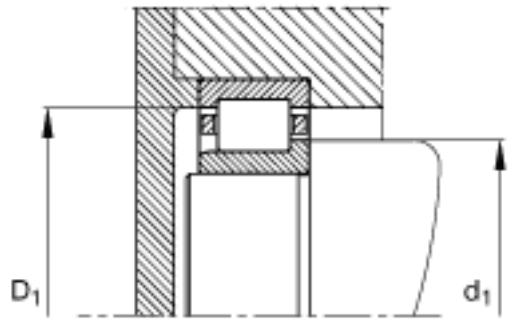
D1
d1

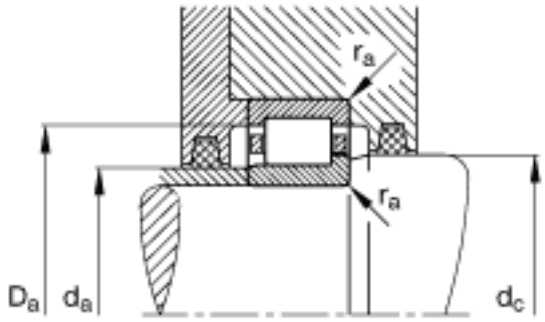
ra
ra
Da
da
dc