E70450

Connection cable

Edge-Gateway/Power cable M12

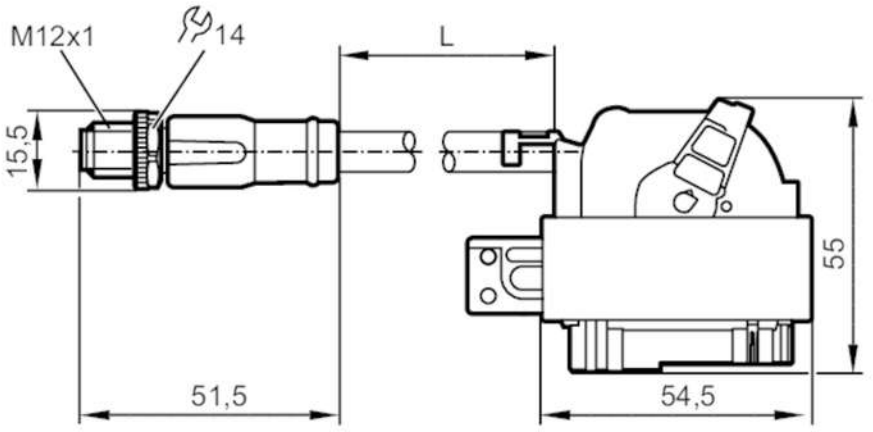

Application		
Application		voltage supply for edgeGateway
Electrical data		
Operating voltage	[V]	8...32 DC
Operating conditions		
Storage temperature	[°C]	-40...105
Protection		IP 65
Mechanical data		
Weight	[g]	111.5
Materials		PBT-GF20
Remarks		
Pack quantity		1 pcs.
Electrical connection		

Cable: 0.6 m, PVC; FLRY-B

Connection

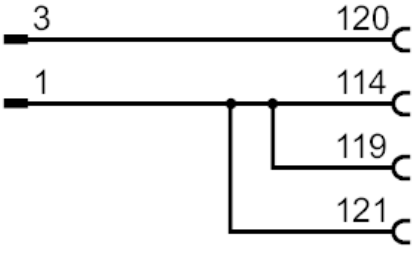

E70450

Connection cable

Edge-Gateway/Power cable M12

Electrical connection - plug



1	L+
2	N.C.
3	L-
4	N.C.