User's Guide

Part Number: E3632-90001
October 2007.

For Safety information, Warranties, and Regulatory information, see the pages behind the Index.

© Copyright Agilent Technologies, Inc. 2000-2007
All Rights Reserved.

Agilent E3632A
DC Power Supply

The Agilent E3632A is a high performance 120 watt-dual range DC power supply with GPIB and RS-232 interfaces. The combination of bench-top and system features in this power supply provides versatile solutions for your design and test requirements.

Convenient bench-top features

- Dual range
- Easy-to-use knob control settings
- Highly visible vacuum-fluorescent display meters
- High accuracy and high resolution
- Remote voltage sensing
- Overvoltage and overcurrent protection
- Output on/off
- Excellent load and line regulation and low ripple and noise
- Operating states storage
- Portable, ruggedized case with non-skid feet

Flexible system features

- GPIB (IEEE-488) and RS-232 interfaces are standard
- SCPI (Standard Commands for Programmable Instruments) compatibility
- I/O setup easily done from front-panel
- Software calibration, no internal adjustments required

Agilent E3632A
DC Power Supply

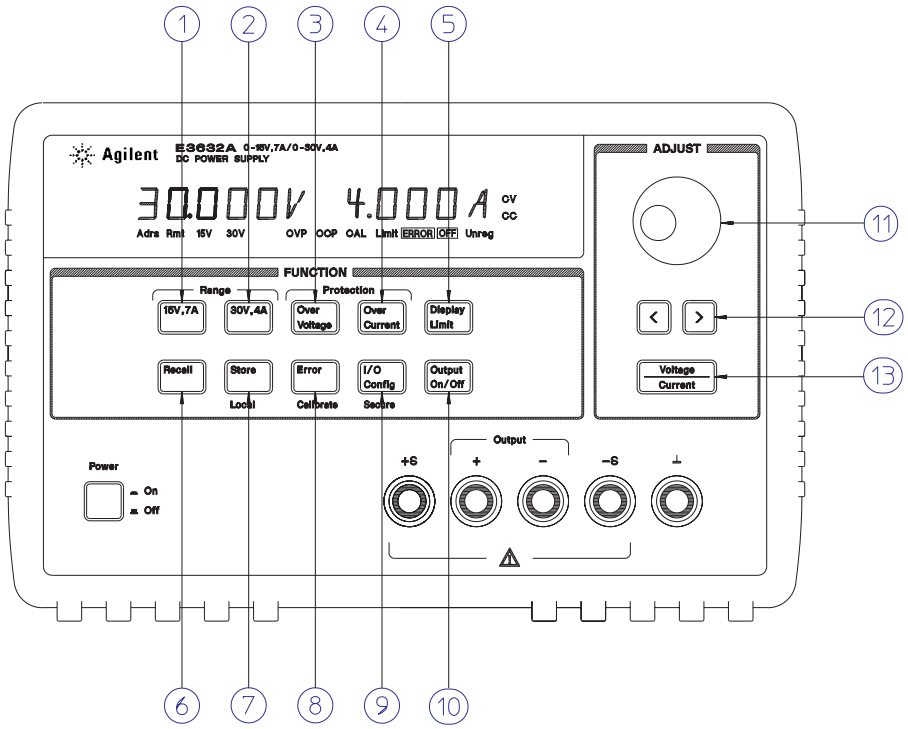

1 15V/7A range selection key
2 30V/4A range selection key
3 Overvoltage protection key
4 Overcurrent protection key
5 Display limit key
6 Recall operating state key
7 Store operating state/Local key
8 Error/Calibrate key
9 I/O Configuration/Secure key
10 Output On/Off key
11 Control knob
12 Resolution selection keys
13 Voltage/current adjust selection key

1 **15V/7A range selection key** Selects the 15V/7A range and allows the full rated output to 15V/7A.

2 **30V/4A range selection key** Selects the 30V/4A range and allows the full rated output to 30V/4A.

3 **Overvoltage protection key** Enables or disables the overvoltage protection function, sets trip voltage level, and clears the overvoltage condition.

4 **Overcurrent protection key** Enables or disables the overcurrent protection function, sets trip current level, and clears the overcurrent condition.

5 **Display limit key** Shows voltage and current limit values on the display and allows knob adjustment for setting limit values.

6 **Recall operating state key** Recalls a previously stored operating state from location "1", "2", or "3".

7 **Store operating state / Local key**[1] Stores an operating state in location "1", "2", or "3" / or returns the power supply to local mode from remote interface mode.

8 **Error / Calibrate key**[2] Displays error codes generated during operation, self-test and calibration / or enables calibration mode (the power supply must be unsecured before performing calibration). *See Service Guide for more details on calibration.*

9 **I/O Configuration / Secure key**[3] Configures the power supply for remote interfaces / or secure or unsecure the power supply for calibration. *See Service Guide for more details on how to secure or unsecure the power supply.*

10 **Output On/Off key** Enables or disables the power supply output. This key toggles between on and off.

11 **Control knob** Increases or decreases the value of the blinking digit by turning clockwise or counter clockwise.

12 **Resolution selection keys** Move the blinking digit to the right or left.

13 **Voltage/current adjust selection key** Selects the knob control function for voltage or current adjustment.

[1] *The key can be used as the "Local" key when the power supply is in the remote interface mode.*

[2] *You can enable the "calibration mode" by holding down this key when you turn on the power supply.*

[3] *You can use it as the "Secure" or "Unsecure" key when the power supply is in the calibration mode.*

Front-Panel Voltage and Current Limit Settings

You can set the voltage and current limit values from the front panel using the following method.

Use the voltage/current adjust selection key, the resolution selection keys, and the control knob to change the voltage and current limit values.

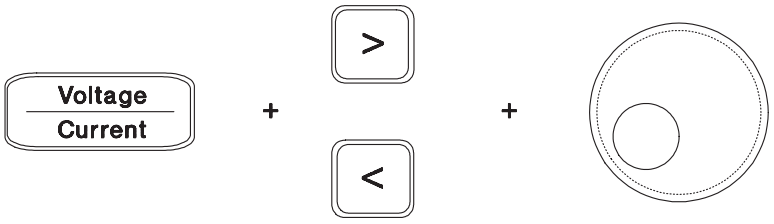

1. Select the desired range using the range selection keys after turning on the power supply.
2. Press the Display Limit key to show the limit values on the display.
3. Move the blinking digit to the appropriate position using the resolution selection keys and change the blinking digit value to the desired voltage limit by turning the control knob. If the display limit times out, press the Display Limit key again.
4. Set the knob to current control mode using the voltage/current adjust selection key.
5. Move the blinking digit to the appropriate position using the resolution selection keys and change the blinking digit value to the desired current limit by turning the control knob.
6. Press the Output On/Off key to enable the output. After about 5 seconds, the display will go to output monitoring mode automatically to display the voltage and current at the output or the display will go to output monitoring mode immediately by pressing the Output On/Off key again.

Note *All front panel keys and controls can be disabled with remote interface commands. The Agilent E3632A must be in "Local" mode for the front panel keys and controls to function.*

Display Annunciators

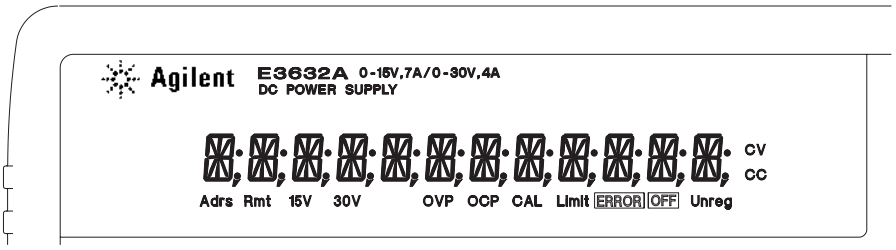

Adrs	Power supply is addressed to listen or talk over a remote interface.
Rmt	Power supply is in remote interface mode.
15V	Shows the 15V/7A range is selected.
30V	Shows the 30V/4A range is selected.
OVP	The overvoltage protection function is enabled when the annunciator turns on or the overvoltage protection circuit has caused the power supply to shutdown when the annunciator blinks.
OCP	The overcurrent protection function is enabled when the annunciator turns on or the overcurrent protection circuit has caused the power supply to shutdown when the annunciator blinks.
CAL	The power supply is in calibration mode.
Limit	The display shows the limit values of voltage and current.
ERROR	Hardware or remote interface command errors are detected and the error bit has not been cleared.
OFF	The output of the power supply is disabled (See *page 52 for more information*).
Unreg	The output of the power supply is unregulated (output is neither CV nor CC).
CV	The power supply is in constant voltage mode.
CC	The power supply is in constant current mode.

To review the display annunciators, hold down Display Limit key as you turn on the power supply.

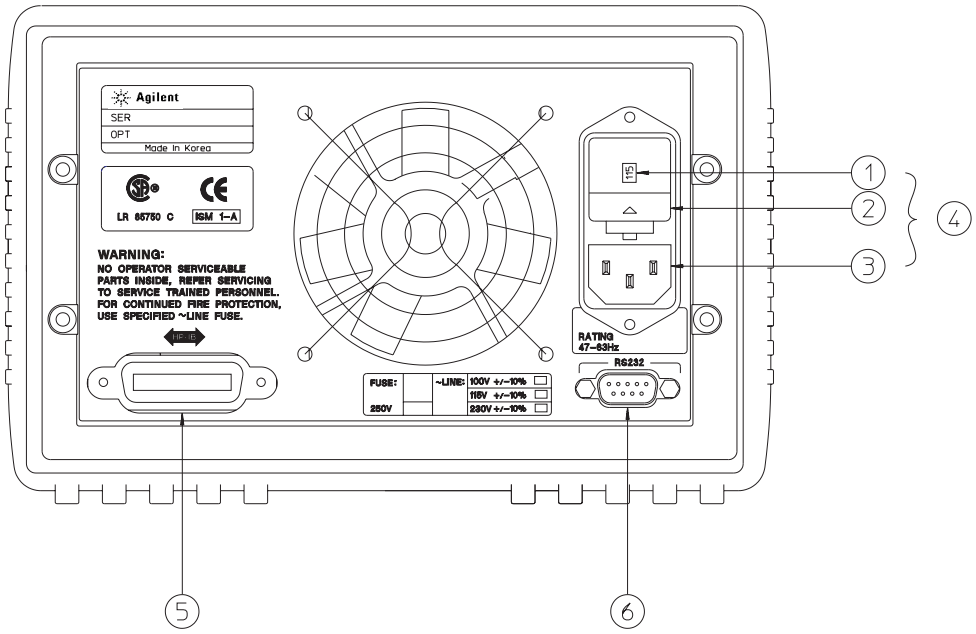

1 Power-line voltage setting
2 Power-line fuse-holder assembly
3 AC inlet
4 Power-line module
5 GPIB (IEEE-488) interface connector
6 RS-232 interface connector

Use the front-panel `I/O Config` **key to:**

- Select the GPIB or RS-232 interface (see chapter 3).
- Set the GPIB bus address (see chapter 3).
- Set the RS-232 baud rate and parity (see chapter 3).

In This Book

General Information Chapter 1 contains a general description of your power supply. This chapter also provides instructions for checking your power supply, connecting to ac power, and selecting power-line voltage.

Initial Operation Chapter 2 ensures that the power supply develops its rated outputs and properly responds to operation from the front panel.

Front-Panel Operation Chapter 3 describes in detail the use of front-panel keys and how they are used to operate the power supply from the front panel. This chapter also shows how to configure the power supply for the remote interface and gives a brief introduction to the calibration features.

Remote Interface Reference Chapter 4 contains reference information to help you program the power supply over the remote interface. This chapter also explains how to program for status reporting.

Error Messages Chapter 5 lists the error messages that may appear as you are working with the power supply. Each listing contains information to help you diagnose and solve the problem.

Application Programs Chapter 6 contains some remote interface applications to help you develop programs for your application.

Tutorial Chapter 7 describes basic operation of linear power supplies and gives specific details on the operation and use of the Agilent E3632A power supply.

Specifications Chapter 8 lists the power supply's specifications.

If you have questions relating to the operation of the power supply, call ***1-800-829-4444*** *in the United States, or contact your nearest Agilent Technologies Sales Office.*

If your Agilent E3632A fails within one year of purchase, Agilent will repair or replace it free of charge. Call 1-800-258-5165 ("Express Exchange") in the United States, or contact your nearest Agilent Technologies Sales Office.

Contents

Chapter 1 General Information

Safety Considerations 14
  Safety and EMC Requirements 14
Options and Accessories 15
  Options 15
  Accessories 15
Description 16
Installation 19
  Initial Inspection 19
  Cooling and Location 19
Input Power Requirements 22
  Power-Line Cord 22
  Power-Line Voltage Selection 22

Chapter 2 Initial Operation

Preliminary Checkout 27
Power-On Checkout 28
Output Checkout 29
  Voltage Output Checkout 29
  Current Output Checkout 30

Chapter 3 Front-Panel Operation

Front-Panel Operation Overview 35
Constant Voltage Operation 36
Constant Current Operation 38
Storing and Recalling Operating States 40
Programming Overvoltage Protection 42
  Setting the OVP Level and Enable the OVP Circuit 42
  Checking OVP Operation 43
  Clearing the Overvoltage Condition 43
Programming Overcurrent Protection 45
  Setting the OCP Level and Enable the OCP Circuit 45
  Checking OCP Operation 46
  Clearing the Overcurrent Condition 46
Remote Voltage Sensing 48
  CV Regulation 48
  Output Rating 48
  Output Noise 48
  Stability 49
  Remote Voltage Sensing Connections 49

Chapter 3 Front-Panel Operation (continued)

Disabling the Output 50
Disabling the Output Using an External Relay 51
Knob Locking 51
System-Related Operations 52
- Self-Test 52
- Error Conditions 53
- Display Control 54
- Firmware Revision Query 55
- SCPI Language Version 55

Remote Interface Configuration 56
- Remote Interface Selection 56
- GPIB Address 57
- Baud Rate Selection (RS-232) 57
- Parity Selection (RS-232) 57
- To Set the GPIB Address 58
- To Set the Baud Rate and Parity (RS-232) 59

GPIB Interface Configuration 61
RS-232 Interface Configuration 62
- RS-232 Configuration Overview 62
- RS-232 Data Frame Format 62
- Connection to a Computer or Terminal 63
- DTR / DSR Handshake Protocol 64
- RS-232 Troubleshooting 65

Calibration Overview 66
- Calibration Security 66
- Calibration Count 70
- Calibration Message 70

Chapter 4 Remote Interface Reference

SCPI Command Summary 73
Simplified Programming Overview 78
- Using the APPLy Command 78
- Using the Low-Level Commands 78
- Reading a Query Response 79
- Selecting a Trigger Source 79
- Power Supply Programming Ranges 80

Using the APPLy Command 81
Output Setting and Operation Commands 82
Triggering Commands 89
- Trigger Source Choices 89
- Triggering Commands 91

System-Related Commands 92
Calibration Commands 96
RS-232 Interface Commands 99
The SCPI Status Registers 100
- What is an *Event* Register? 100
- What is an *Enable* Register? 100
- SCPI Status System 101
- The Questionable Status Register 102
- The Standard Event Register 103
- The Status Byte Register 104
- Using Service Request (SRQ) and Serial POLL 105
- Using *STB? to Read the Status Byte 106
- Using the Message Available Bit (MAV) 106
- To Interrupt Your Bus Controller Using SRQ 106
- To Determine When a Command Sequence is Completed 107
- Using *OPC to Signal When Data is in the Output Buffer 107

Status Reporting Commands 108
An Introduction to the SCPI Language 111
- Command Format Used in This Manual 112
- Command Separators 113
- Using the *MIN* and *MAX* Parameters 113
- Querying Parameter Settings 114
- SCPI Command Terminators 114
- IEEE-488.2 Common Commands 114
- SCPI Parameter Types 115

Halting an Output in Progress 116
SCPI Conformance Information 117
IEEE-488 Conformance Information 120

Contents

Chapter 5 Error Messages

Execution Errors 123
Self-Test Errors 128
Calibration Errors 129

Chapter 6 Application Programs

C++ Example for GPIB(IEEE 488) 133
Excel 5.0 Example for Windows 3.1 and GPIB 135

Chapter 7 Tutorial

Overview of Agilent E3632A Operation 141
Output Characteristics 143
  Unregulated State 145
  Unwanted Signals 145
Connecting the Load 147
  Output Isolation 147
  Multiple Loads 147
  Remote Voltage Sensing 148
  Load Consideration 149
Extending the Voltage and Current Range 151
  Series Connections 151
  Parallel Connections 151
Remote Programming 152
Reliability 154

Chapter 8 Specifications

Performance Specifications 157
Supplemental Characteristics 159

Index 163

1

General Information

General Information

This chapter provides a general description of your power supply. This chapter also contains instructions for initial inspection, location and cooling for bench and rack operation, selecting the power-line voltage, and connecting your power supply to ac power.

Safety Considerations

This power supply is a Safety Class I instrument, which means that it has a protective earth terminal. That terminal must be connected to earth ground through a power source with a 3-wire ground receptacle.

Before installation or operation, check the power supply and review this manual for safety markings and instructions. Safety information for specific procedures is located at the appropriate places in this manual. See also "*Safety*" at the beginning of this manual for general safety information.

Safety and EMC Requirements

This power supply is designed to comply with the following safety and EMC (Electromagnetic Compatibility) requirements:

- IEC 1010-1(1990)/EN 61010-1(1993) + A2 (1995): Safety Requirements for Electrical Equipment for Measurement, Control, and Laboratory Use
- CSA C22.2 No.1010.1-92: Safety Requirements for Electrical Equipment for Measurement, Control, and Laboratory Use
- UL 1244: Electrical and Electric Measuring and Testing Equipment
- EMC Directive 89/336/EEC
- Low Voltage Directive: 73/23/EEC
- EN 55011(1991) Group I, Class A/CISPR II(1990): Limits and Methods of Radio Interface Characteristics of Industrial, Scientific, and Medical(ISM) Radio-Frequency Equipment.
- EN50082-1(1992):
  IEC 801-2(1991): Electrostatic Discharge Requirements
  IEC 801-3(1984): Radiated Electromagnetic Field Requirements
  IEC 801-4(1988): Electrical Fast Transient/Burst Requirements
- ICES/NMB-001
  This ISM device complies with Canadian ICES-001.
  Cet appareil ISM est conforme à la norme NMB-001 du Canada.

Options and Accessories

Options

Options 0EM, 0E3, and 0E9 determine which power-line voltage is selected at the factory. The standard unit is configured for 115 Vac ± 10%, 47-63 Hz input voltage. For more information about changing the power-line voltage setting, see "*Power-Line Voltage Selection*", starting on page 22 in this chapter.

Option	Description
0EM	**115** Vac ± 10%, 47-63 Hz input voltage
0E3	230 Vac ± 10%, 47-63 Hz input voltage
0E9	100 Vac ± 10%, 47-63 Hz input voltage
1CM	Rack mount kit (Agilent part number 5063-9243)
0L2	Extra English manual set (local language manual files are included on the CD-ROM, Agilent part number 5964-8251)

Accessories

The accessories listed below may be ordered from your local Agilent Technologies Sales Office either with the power supply or separately.

Agilent No.	Description
10833A	GPIB cable, 1 m (3.3 ft.)
10833B	GPIB cable, 2 m (6.6 ft.)
34398A	RS-232, 9 pin (f) to 9 pin (f), 2.5 m (8.2 ft.) cable; plus 9 pin (m) to 25 pin (f) adapter
34399A	RS-232 adapter kit (contains 4 adapters): 9 pin (m) to 25 pin (m) for use with PC or printer 9 pin (m) to 25 pin (f) for use with PC or printer 9 pin (m) to 25 pin (m) for use with modem 9 pin (m) to 9 pin (m) for use with modem

Description

The Agilent E3632A DC power supply feature a combination of programming capabilities and linear power supply performance that makes it ideal for power systems applications. The power supply is programmable locally from the front panel or remotely over the GPIB and RS-232 interfaces. This power supply has two ranges, allowing more voltage at a lower current. The desired output range is selected from the front panel or over the remote interfaces.

Operational features include:

- Dual range of 15V/7A or 30V/4A
- Constant voltage (CV) or constant current (CC) operation
- Overvoltage protection (OVP) and overcurrent protection (OCP)
- Three storage locations (1 to 3) for user-defined operating states
- Automatic turn-on self-test
- Remote sensing for load voltage
- User calibration from the front panel or over the remote interfaces

The front panel operation permits:

- Easy-to-use of knob control
- Output range selection
- Enabling or disabling OVP and OCP features
- Setting the OVP and OCP trip levels
- Clearing OVP and OCP conditions
- Setting and displaying the voltage and current limit values
- Saving and recalling operating states
- Returning the power supply to local mode from remote interface mode
- Displaying remote interface error message
- Calibrating the power supply, including changing the calibration secure code
- Configuring the power supply for remote interfaces
- Enabling or disabling the output

When operated over the remote interface, the power supply can be both a listener and a talker. Using an external controller, you can instruct the power supply to set the output and to send the status data back over the GPIB or RS-232. Capabilities include the following features:

- Voltage and current programming
- Voltage and current readback
- Present and stored status readback
- Programming syntax error detection
- Complete self-test

The front-panel VFD (Vacuum-Fluorescent Display) includes:

- Displaying actual values of output voltage and current (*meter mode*)
- Or displaying the limit values of voltage and current (*limit mode*)
- Checking the operating status from the annunciators
- Checking the type of error from the error codes (messages)

Connections to the power supply's output and to chassis ground are made to binding posts on the front panel

Warning

Floating the power supply output more than ±60 Vdc from the chassis presents an electric shock hazard to the operator. Do not float the outputs more than ±60 Vdc when metal shorting bars without insulation are used to connect the (+) output to the (+) sense and the (-) output to the (-) sense terminals.

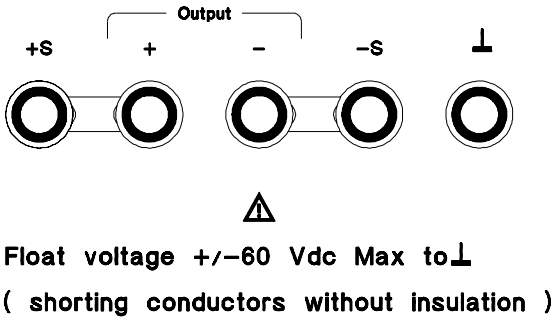

Warning

Outputs can be floated to maximum of ±240 Vdc provided that the metal shorting bars without insulation are either replaced with insulated conductors or they are removed from the terminals so there is no operator access to the output conductors without insulation. All field wiring insulation must be adequate for the voltage present.

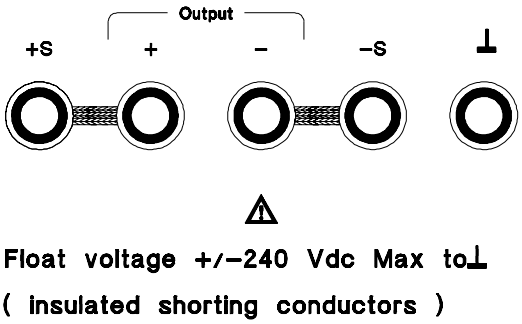

The power supply is shipped with a detachable, 3-wire grounding type power cord. The ac line fuse is an extractor type on the rear panel. The power supply can be calibrated from the front panel directly or with a controller over the GPIB or RS-232 interface using calibration commands. Correction factors are stored in *non-volatile* memory and are used during output programming. Calibration from the front panel or a controller eliminate the need to remove the top cover or even the need to remove the power supply from your system cabinet. You can guard against unauthorized calibration by using the "Secured" calibration protection function.

Installation

Initial Inspection

When you receive your power supply, inspect it for any obvious damage that may have occurred during shipment. If any damage is found, notify the carrier and the nearest Agilent Sales Office immediately. Warranty information is shown in the front of this manual.

Keep the original packing materials in case the power supply has to be returned to Agilent Technologies in the future. If you return the power supply for service, attach a tag identifying the owner and model number. Also include a brief description of the problem.

Mechanical Check

This check confirms that there are no broken keys or knob, that the cabinet and panel surfaces are free of dents and scratches, and that the display is not scratched or cracked.

Electrical Check

Chapter 2 describes an initial operation procedure which, when successfully completed, verifies to a high level of confidence that the power supply is operating in accordance with its specifications. Detailed electrical verification procedures are included in the *Service Guide*.

Cooling and Location

Cooling

The power supply can operate without loss of performance within the temperature range of 0 °C to 40 °C, and with derated output current from 40 °C to 55 °C. A fan cools the power supply by drawing air through the rear panel and exhausting it out the sides. Using an Agilent rack mount will not impede the flow of air.

Bench Operation

Your power supply must be installed in a location that allows sufficient space at the sides and rear of the power supply for adequate air circulation. The rubber bumpers must be removed for rack mounting.

Rack Mounting

The power supply can be mounted in a standard 19-inch rack cabinet using one of three optional kits available. A rack-mounting kit for a single instrument is available as Option 1CM (P/N 5063-9243). Installation instructions and hardware are included with each rack-mounting kit. Any Agilent System II instrument of the same size can be rack-mounted beside the Agilent E3632A power supply.

Remove the front and rear bumpers before rack-mounting the power supply.

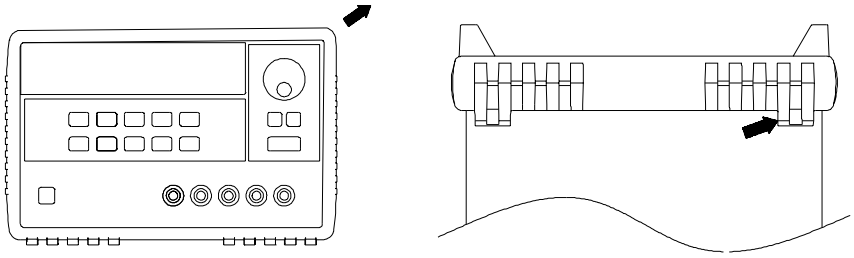

To remove the rubber bumper, stretch a corner and then slide it off.

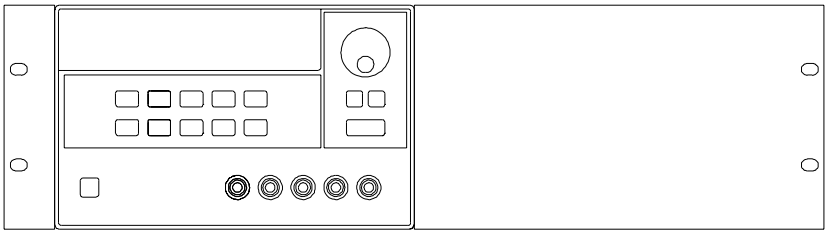

To rack mount a single instrument, order adapter kit 5063-9243.

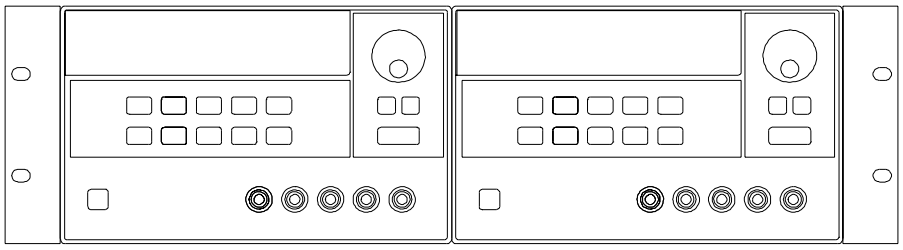

To rack mount two instrument of the same depth side-by-side, order lock-link kit 5061-9694 and flange kit 5063-9214.

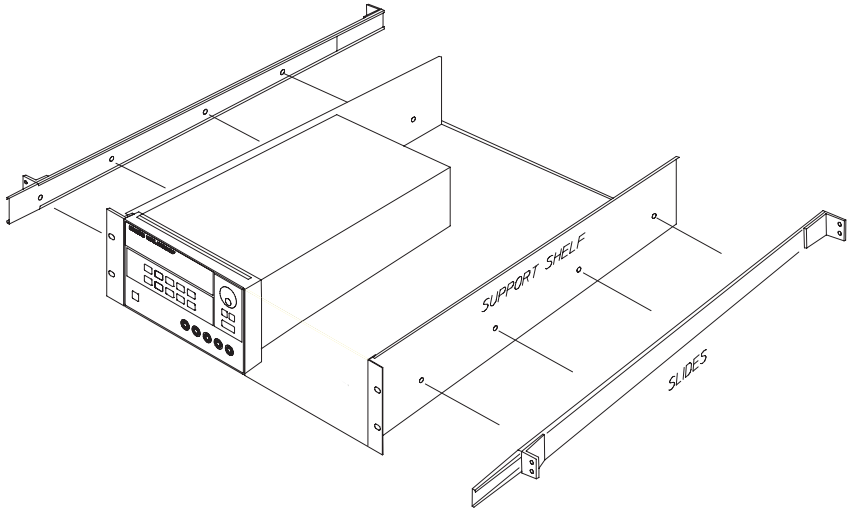

To install two instruments in a sliding support shelf, order support shelf 5063-9256, and slide kit 1494-0015.

Input Power Requirements

You can operate your power supply from a nominal 100 V, 115 V, or 230 V single phase ac power source at 47 to 63 Hz. An indication on the rear panel shows the nominal input voltage set for the power supply at the factory. If necessary, you can change the power-line voltage setting according to the instructions on the next page.

Power-Line Cord

The power supply is shipped from the factory with a power-line cord that has a plug appropriate for your location. Contact the nearest Agilent Technologies Sales and Service Office if the wrong power-line cord is included with your power supply. Your power supply is equipped with a 3-wire grounding type power cord; the third conductor being the ground. The power supply is grounded only when the power-line cord is plugged into an appropriate receptacle. Do not operate your power supply without adequate cabinet ground connection.

Power-Line Voltage Selection

Power-line voltage selection is accomplished by adjusting two components: power-line voltage selector and power-line fuse on the power-line module of the rear panel. To change the power-line voltage, proceed as follows:

1 ***Remove the power cord.*** Remove the fuse-holder assembly with a flat-blad screwdriver from the rear panel.

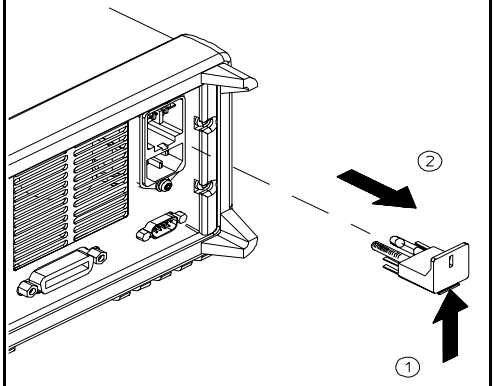

2 *Install the correct line fuse.* Remove the power-line voltage selector from the power-line module.

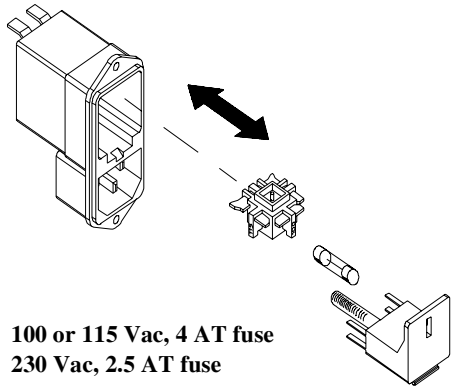

100 or 115 Vac, 4 AT fuse
230 Vac, 2.5 AT fuse

3 Rotate the power-line voltage selector until the correct voltage appears.

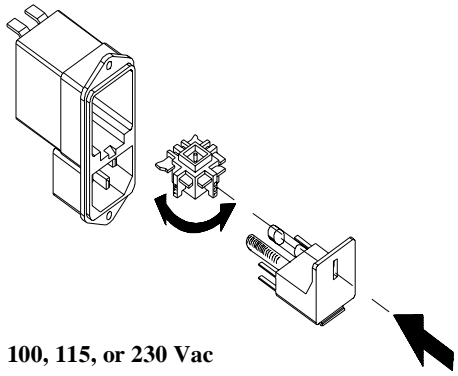

100, 115, or 230 Vac

4 Replace the power-line voltage selector and the fuse-holder assembly in the rear panel.

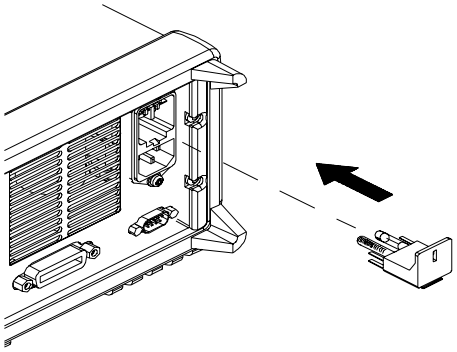

2

Initial Operation

Initial Operation

There are three basic tests in this chapter. The automatic power-on test includes a self-test that checks the internal microprocessors and allows the user visually to check the display. The output check ensures that the power supply develops its rated outputs and properly responds to operation from the front panel. For complete performance and/or verification tests, refer to the *Service Guide*.

This chapter is intended for both the experienced and the inexperienced user because it calls attention to certain checks that should be made prior to operation.

Throughout this chapter the key to be pressed is shown in the left margin.

Preliminary Checkout

The following steps help you verify that the power supply is ready for use.

1 **Verify the power-line voltage setting on the rear panel.**

The power-line voltage is set to the proper value for your country when the power supply is shipped from the factory. Change the voltage setting if it is not correct. The settings are: 100, 115, or 230 Vac.

2 **Verify that the correct power-line fuse is installed.**

The correct fuse is installed for your country when the power supply is shipped from the factory. For 100 or 115 Vac operation, you must use a 4 AT fuse. For 230 Vac operation, you must use a 2.5 AT fuse.

3 **Connect the power-line cord and turn on your power supply.**

The front-panel display will light up and a power-on self-test occurs automatically when you turn on the power supply.

See "Power-Line Voltage Selection", starting on page 22 in chapter 1 if you need to change the power-line voltage or the power-line fuse.

To replace the 4 AT fuse, order Agilent part number 2110-0996.
To replace the 2.5 AT fuse, order Agilent part number 2110-0999.

Power-On Checkout

The power-on test includes an automatic self-test that checks the internal microprocessors and allows the user visually to check the display. You will observe the following sequence on the display after pressing the front panel power switch to on.

1 All segments of the display including all annunciators will turn on for about one second.

To review the annunciators, hold down Display Limit *key as you turn on the power supply.*

2 The GPIB address or RS-232 message will then be displayed for about one second.

ADDR 05 (**or** RS-232)

The GPIB address is set to "5" when the power supply is shipped from the factory for remote interface configuration. If this is not the first time the power supply is turned on, a different interface (RS-232) or a different GPIB address may appear.

See "Remote Interface Configuration" in chapter 3 starting on page 56 if you need to change the remote interface configuration.

3 The "15V", "OVP", "OCP" and "OFF" annunciators are on. All others are off.

The power supply will go into the *power-on / reset* state; the output is disabled (the **OFF** annunciator turns on); the 15V/7A range is selected (the **15V** annunciator turns on); and the knob is selected for *voltage* control. Notice that the **OVP** and **OCP** annunciator also turn on.

Output On/Off

4 Enable the outputs.

Press the Output On/Off key to enable the output. The **OFF** annunciator turns off and the **15V**, **OVP**, **OCP**, and **CV** annunciators are lit. The *blinking* digit can be adjusted by turning the knob. Notice that the display is in the meter mode. "Meter mode" means that the display shows the actual output voltage and current.

Note

If the power supply detects an error during power-on self-test, the **ERROR** *annunciator will turn on. See "Error Messages" for more information starting on page 121 in chapter 5*

Output Checkout

The following procedures check to ensure that the power supply develops its rated outputs and properly responds to operation from the front panel. For complete performance and verification tests, refer to the *Service Guide*.

For each step, use the keys shown on the left margins.

Voltage Output Checkout

The following steps verify basic voltage functions with no load.

Power

1 Turn on the power supply.

The power supply will go into the *power-on / reset* state; the output is disabled (the **OFF** annunciator turns on); the 15V/7A range is selected (the **15V** annunciator turns on); and the knob is selected for *voltage* control.

Output On/Off

2 Enable the outputs.

The **OFF** annunciator turns off and the **15V**, **OVP**, **OCP**, and **CV** annunciators are lit. The *blinking* digit can be adjusted by turning the knob. Notice that the display is in the meter mode. "Meter mode" means that the display shows the actual output voltage and current.

3 Check that the front-panel voltmeter properly responds to knob control for the 15V/7A range.

Turn the knob clockwise or counter clockwise to check that the voltmeter responds to knob control and the ammeter indicates nearly zero.

4 Ensure that the voltage can be adjusted from zero to the full rated value. [1]

Adjust the knob until the voltmeter indicates 0 volts and then adjust the knob until the voltmeter indicates "**15.0** volts".

[1] *You can use the resolution selection keys to move the blinking digit to the right or left when setting the voltage.*

Current Output Checkout

The following steps check basic current functions with a short across the power supply's output.

Power

1 Turn on the power supply.

The power supply will go into the *power-on / reset* state; the output is disabled (the **OFF** annunciator turns on); the 15V/7A range is selected (the **15V** annunciator turns on); and the knob is selected for *voltage* control.

2 Connect a short across (+) and (-) output terminals with an insulated test lead.

Output On/Off

3 Enable the output.

The **OFF** annunciator turns off and the **15V**, **OVP**, and **OCP** annunciators are lit. The **CV** or **CC** annunciator turns on depending on the resistance of the test lead. The *blinking* digit can be adjusted by turning the knob. Notice that the display is in the meter mode. "Meter mode" means that the display shows the actual output voltage and current.

Display Limit

4 Adjust the voltage limit value to 1.0 volt.

Set the display to the *limit* mode (the **Limit** annunciator will be *blinking*). Adjust the voltage limit to 1.0 volt to assure CC operation. The **CC** annunciator will turn on.

Volt/Curr

5 Check that the front-panel ammeter properly responds to knob control for the 15V/7A range.

Set the knob to the *current* control, and turn the knob clockwise or counter clockwise when the display is in the meter mode (the **Limit** annunciator is off). Check that the ammeter responds to knob control and the voltmeter indicates nearly zero (the voltmeter will show the voltage drop caused by the test lead).

6 Ensure that the current can be adjusted from zero to the full rated value.

Adjust the knob until the ammeter indicates 0 amps and then until the ammeter indicates 7.0 amps. [1]

Note

If an error has been detected during the output checkout procedures, the **ERROR** *annunciator will turn on. See "Error Messages" for more information starting on page 121 in chapter 5.*

[1] *You can use the resolution selection keys to move the blinking digit the right or left when setting the current.*

3

Front-Panel Operation

Front-Panel Operation

So far you have learned how to install your power supply and perform initial operation. During the initial operation, you were briefly introduced to operating from the front panel as you learned how to check basic voltage and current functions. This chapter will describe in detail the use of these front-panel keys and show how they are used to accomplish power supply operation.

- Front-Panel Operation Overview, page 35
- Constant Voltage Operation, page 36
- Constant Current Operation, page 38
- Storing and Recalling Operating States, page 40
- Programming Overvoltage Protection, page 42
- Programming Overcurrent Protection, page 45
- Remote Voltage Sensing, page 48
- Disabling the Output, page 50
- Disabling the Output Using an External Relay, page 51
- Knob Locking, page 51
- System-Related Operations, page 52
- Remote Interface Configuration, page 56
- GPIB Interface Configuration, page 61
- RS-232 Interface Configuration, page 62
- Calibration Overview, page 66

Throughout this chapter the key to be pressed is shown in the left margin.

Note

See "Error Messages", starting on page 121 in chapter 5 if you encounter any errors during front-panel operation.

Front-Panel Operation Overview

The following section describes an overview of the front-panel keys before operating your power supply.

- The power supply is shipped from the factory configured in the *front-panel* operation mode. At power-on, the power supply is automatically set to operate in the front-panel operation mode. When in this mode, the front-panel keys can be used. When the power supply is in *remote* operation mode, you can return to front-panel operation mode at any time by pressing the Local key if you did not previously send the front-panel lockout command. A change between front-panel and remote operation modes will *not* result in a change in the output parameters.
- The power supply has two output ranges of 15V/7A or 30V/4A. This feature allows more voltage at a lower current or more current at a lower voltage. The desired output range is selected from the front panel or over the remote interfaces. The **15V** or **30V** annunciator indicates the presently selected range.
- When you press Display Limit key (the **Limit** annunciator blinks), the display of the power supply goes to the *limit* mode and the present limit values will be displayed. In this mode, you can also observe the change of the limit values when adjusting the knob. If you press the Display Limit key again or let the display time-out after several seconds, the power supply will return the display to the *meter* mode (the **Limit** annunciator turns off). In this mode, the actual output voltage and current will be displayed.
- The output of the power supply can be enabled or disabled from the front panel using the Output On/Off key. When the output is off, the **OFF** annunciator turns on and the output is disabled.
- The display provides the present operating status of the power supply with annunciators and also informs the user of error codes. For example, the power supply is operating in CV mode in the 15V/7A range and controlled from the front panel, then the **CV** and **15V** annunciators will turn on. If, however, the power supply is remotely controlled, the **Rmt** annunciator will also turn on, and when the power supply is being addressed over GPIB interface, the **Adrs** annunciator will turn on. See "*Display Annunciators*" on page 5 for more information.

Constant Voltage Operation

To set up the power supply for constant voltage (CV) operation, proceed as follows.

- *Front-panel operation:*

1 Connect a load to the output terminals.

With power-off, connect a load to the (+) and (-) output terminals.

Power

2 Turn on the power supply.

The power supply will go into the *power-on / reset* state; the output is disabled (the **OFF** annunciator turns on); the 15V/7A range is selected (the **15V** annunciator turns on); and the knob is selected for *voltage* control.

To operate the power supply in the 30V/4A range, press the 30V,4A key before proceeding to the next step. The **30V** annunciator turns on.

Display Limit

3 Set the display to the limit mode.

Notice that the **Limit** annunciator blinks, indicating that the display is in the limit mode. When the display is in the *limit* mode, you can see the voltage and current limit values of the power supply.

> *In constant voltage mode, the voltage values between the meter and limit modes are the same, but the current values are not. Moreover, if the display is in the meter mode, you cannot see the change of current limit value when adjusting the knob. We recommend that you should set the display to "limit" mode to see the change of current limit value in the constant voltage mode whenever adjusting the knob.*

Volt/Curr

4 Adjust the knob for the desired current limit. [1]

Check that the **Limit** annunciator still blinks. Set the knob for *current* control. The second digit of the ammeter will be *blinking*. The blinking digit can be changed using the resolution selection keys and the blinking digit can be adjusted by turning the knob. Adjust the knob to the desired current limit.

[1] *You can use the resolution selection keys to move the blinking digit to the right or left when setting current.*

Volt/Curr

5 Adjust the knob for the desired output voltage. [1]

Check that the **Limit** annunciator still blinks. Set the knob for *voltage* control. The second digit of the voltmeter will be *blinking*. Change the blinking digit using the resolution selection keys and adjust the knob to the desired output voltage.

Display Limit

6 Return to the meter mode.

Press Display Limit key or let the display time-out after several seconds to return to the meter mode. Notice that the **Limit** annunciator turns off and the display shows "OUTPUT OFF" message.

Output On/Off

7 Enable the output.

The **OFF** annunciator turns off and the **15V** or **30V**, **OVP**, **OCP** and **CV** annunciators are lit. Notice that the display is in the meter mode. In the *meter* mode, the display shows the actual output voltage and current.

Refer to "Programming Overvoltage Protection" and "Programming Overcurrent Protection" sections, starting on page 42 and page 45 for more information on **OVP** *and* **OCP** *annunciators.*

8 Verify that the power supply is in the constant voltage mode.

If you operate the power supply in the constant voltage (CV) mode, verify that the **CV** annunciator is lit. If the **CC** annunciator is lit, choose a *higher* current limit.

Note

During actual CV operation, if a load change causes the current limit to be exceeded, the power supply will automatically crossover to the constant current mode at the preset current limit and the output voltage will drop proportionately.

- *Remote interface operation:*

`CURRent {<current>|MIN|MAX}`	*Set the current*
`VOLTage {<voltage>|MIN|MAX`	*Set the voltage*
`OUTPut ON`	*Enable the output*

[1] *You can use the resolution selection keys to move the blinking digit to the right or left when setting voltage.*

Constant Current Operation

To set up the power supply for constant current (CC) operation, proceed as follows.

- *Front-panel operation:*

1 Connect a load to the output terminals.

With power-off, connect a load to the (+) and (-) output terminals.

Power

2 Turn on the power supply.

The power supply will go into the *power-on / reset* state; the output is disabled (the **OFF** annunciator turns on); the 15V/7A range is selected (the **15V** annunciator turns on); and the knob is selected for *voltage* control.

To operate the power supply in the 30V/4A range, press 30V,4A key before proceeding to the next step. The **30V** annunciator turns on.

Display Limit

3 Set the display to the limit mode.

Notice that the **Limit** annunciator blinks, indicating that the display is in the limit mode. When the display is in the *limit* mode, you can see the voltage and current limit values of the selected supply.

> *In constant current mode, the current values between the meter mode and limit mode are the same, but the voltage values are not. Moreover, if the display is in the meter mode, you cannot see the change of voltage limit value when adjusting the knob. We recommend that you should set the display to "limit" mode to see the change of voltage limit value in the constant current mode whenever adjusting the knob.*

4 Adjust the knob for the desired voltage limit. [1]

Check that the **Limit** annunciator still blinks and the second digit of voltmeter *blinks* to indicate the knob is selected for voltage control. The blinking digit can be changed using the resolution keys and the blinking digit can be adjusted by turning the knob. Adjust the knob for the desired voltage limit.

[1] *You can use the resolution selection keys to move the blinking digit to the right or left when setting the voltage.*

Volt/Curr

5 Adjust the knob for the desired output current. [1]

Check that the **Limit** annunciator still blinks. Set the knob for *current* control. The second digit of the ammeter will be *blinking*. Change the blinking digit using the resolution selection keys and adjust the knob to the desired output current.

Display Limit

6 Return to the meter mode.

Press Display Limit key or let the display time-out after several seconds to return the meter mode. Notice that the **Limit** annunciator turns off and the display shows "OUTPUT OFF" message.

Output On/Off

7 Enable the output.

The **OFF** annunciator turns off and the **15V** or **30V**, **OVP**, **OCP** and **CC** annunciators are lit. Notice that the display is in the meter mode. In the *meter* mode, the display shows the actual output voltage and current.

Refer to "Programming Overvoltage Protection" and "Programming Overcurrent Protection" sections, starting on page 42 and page 45 for more information on **OVP** *and* **OCP** *annunciators.*

8 Verify that the power supply is in the constant current mode.

If you operate the power supply in the constant current (CC) mode, verify that the **CC** annunciator is lit. If the **CV** annunciator is lit, choose a *higher* voltage limit.

Note

During actual CC operation, if a load change causes the voltage limit to be exceeded, the power supply will automatically crossover to constant voltage mode at the preset voltage limit and the output current will drop proportionately.

- *Remote interface operation:*

```
VOLTage {<voltage>|MIN|MAX}      Set the voltage
CURRent {<current>|MIN|MAX}      Set the current
OUTPut ON                        Enable the output
```

[1] *You can use the resolution selection keys to move the blinking digit to the right or left when setting the current.*

Storing and Recalling Operating States

You can store up to three different operating states in *non-volatile* memory. This also enables you to recall the entire instrument configuration with just a few key presses from the front panel.

The memory locations are supplied with the reset states from the factory for front-panel operation. Refer to the description of `*RST` command, starting on page 94 in chapter 4 for more information. The following steps show you how to store and recall an operating state.

- *Front-panel operation:*

1 Set up the power supply for the desired operating state.

The storage feature "remembers" output range selection, the limit value settings of voltage and current, output on/off state, OVP and OCP on/off state, and OVP and OCP trip levels.

Store

2 Turn on the storage mode.

Three memory locations (numbered 1, 2 and 3) are available to store the operating states. The operating states are stored in *non-volatile* memory and are remembered when being recalled.



This message appears on the display for approximately 3 seconds.

3 Store the operating state in memory location "3". ◯

Turn the knob to the right to specify the memory location 3.

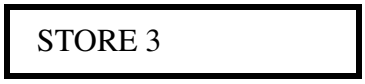

To cancel the store operation, let the display time-out after about 3 seconds or press any other function key except the Store *key. The power supply returns to the normal operating mode and to the function pressed.*

Store

4 Save the operating state.

The operating state is now stored. To recall the stored state, go to the following steps.

DONE

This message appears on the display for approximately 1 second.

Recall

5 Turn on the recall mode.

Memory location "1" will be displayed in the recall mode.

RECALL 1

This message appears on the display for approximately 3 seconds.

6 Recall the stored operating state.

Turn the knob to the right to change the displayed storage location to 3.

RECALL 3

If this setting is not followed within 3 seconds with Recall *key stroke, the power supply returns to normal operating mode and will not recall the instrument state 3 from memory.*

Recall

7 Restore the operating state.

The power supply should now be configured in the same state as when you stored the state on the previous steps.

DONE

This message appears on the display for approximately 1 second.

- *Remote interface operation:*

`*SAV {1|2|3}`	*Store an operating state to a specified location*
`*RCL {1|2|3}`	*Recall a previously stored state from a specified location*

Programming Overvoltage Protection

Overvoltage protection guards the load against output voltages that reach a specified value greater than the programmed protection level. It is accomplished by shorting the output via an internal SCR when the trip level is set to equal or greater than 3 volts, or by progamming the output to 1 volt when the trip level is set to less than 3 volts.

The following steps show how to set the OVP trip level, how to check OVP operation, and how to clear overvoltage condition.

- *Front-panel operation:*

Setting the OVP Level and Enable the OVP Circuit

Power

1 Turn on the power supply.

The power supply will go into the *power-on / reset* state; the output is disabled (the **OFF** annunciator turns on); the 15V/7A range is selected (the **15V** annunciator turns on); and the knob is selected for *voltage* control.

Output On/Off

2 Enable the output.

The **OFF** annunciator turns off and the display will go to the meter mode.

Over Voltage

3 Enter the OVP menu and set the trip level.



You will see the above message on the display when you enter the OVP menu. Adjust the control knob for the desired OVP trip level.

Note

Note that you cannot set the trip levels to lower than 1.0 volt.

Over Voltage

4 Enable the OVP circuit.



You will see the above message after pressing Over Voltage key.

Over Voltage

5 Exit the OVP menu.

```
CHANGED
```

The “CHANGED” message is highlighted for a second to show that the new OVP trip level is now in effect. If the OVP settings are not changed, “NO CHANGE” will be displayed. The power supply will exit the OVP menu and the display will return to the meter mode. Check that the **OVP** annunciator turns on.

Checking OVP Operation

To check OVP operation, raise the output voltage to near the trip point. Then very gradually increase the output by turning the knob until the OVP circuit trips. This will cause the power supply output to drop to near zero, the **OVP** annunciator to *blink*, and the **CC** annunciator to turn on. The “OVP TRIPPED” message also appears on the display.

Clearing the Overvoltage Condition

When the OVP condition occurs (the “OVP TRIPPED” message is shown on the display), the **OVP** annunciator *blinks*. When it was caused by external voltage source such as a battery, disconnect it first. The following steps show how to clear the overvoltage conditions and get back to normal mode operation. In the following steps, the display will go back to "OVP TRIPPED" if you let the display time out after about several seconds.

Over Voltage or Display Limit

1 Readjust the OVP trip level or the output voltage level.

Lower the output voltage level below the OVP trip point after pressing the Display Limit or raise the OVP trip level by using the knob after pressing the Over Voltage key.

Over Voltage

2 Move to the clear mode.

```
ovp on
```

You will see the above message after pressing the Over Voltage key. If you changed the output voltage level, press the Over Voltage key twice. Turn the knob to the right until the "OVP CLEAR" appears on the display.

Over Voltage

3 Clear the overvoltage condition and exit this menu.

Now, when you press Over Voltage key again, the "DONE" message is displayed for a second and the **OVP** annunciator will not blink any more. The output will return to meter mode.

- *Remote interface operation:*

`VOLT:PROT {<voltage>|MIN|MAX}`	*Set the OVP level*
`VOLT:PROT:STAT {OFF|ON)`	*Disable or enable the OVP circuit*
`VOLT:PROT:CLE`	*Clear the tripped OVP circuit*

Note

The power supply's OVP circuit contains a crowbar SCR, which effectively shorts the output of the power supply whenever the overvoltage condition occurs. If external voltage source such as a battery is connected across the output, and the overvoltage condition inadvertently occurs, the SCR will continuously sink a large current from the source; possibly damaging the power supply. To avoid this a diode must be connected in series with the output as shown below.

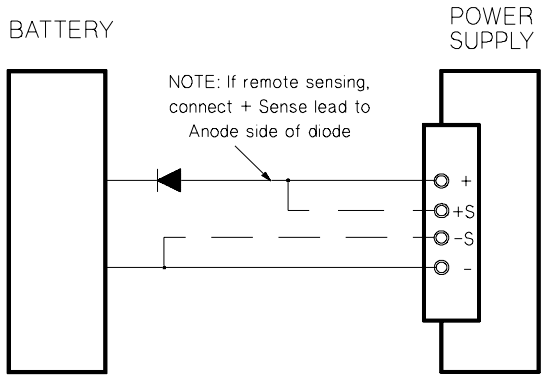

Figure 3-1. Recommended Protection Circuit for Battery Charging

Programming Overcurrent Protection

Overcurrent protection guards the load against output currents that reach a specified value greater than the programmed protection level. It is accomplished by programming the output current to zero.

The following steps show how to set the overcurrent protection trip level, how to check OCP operation and how to clear overcurrent condition.

- *Front-panel operation:*

Setting the OCP Level and Enable the OCP Circuit

Power

1 Turn on the power supply.

The power supply will go into the *power-on / reset* state; the output is disabled (the **OFF** annunciator turns on); the 15V/7A range is selected (the **15V** annunciator turns on); and the knob is selected for *voltage* control.

Output On/Off

2 Enable the output.

The **OFF** annunciator turns off and the display will go to the meter mode.

Over Current

3 Enable the OCP menu and set the trip level.



You will see the above message on the display when you enter the OCP menu. Adjust the knob for the desired OCP trip level.

Over Current

4 Enable the OCP circuit.



You will see the above message after pressing the Over Current key.

Over Current

5 Exit the OCP menu.

```
CHANGED
```

The “CHANGED” message is displayed for a second to show that the new OCP trip level is now in effect. If the OCP settings are not changed, “NO CHANGE” will be displayed. The power supply will exit the OCP menu and the display will return to the meter mode. Check that the **OCP** annunciator turns on.

Checking OCP Operation

To check OCP operation, raise the output current to near the trip point. Then very gradually increase the output by turning the knob until the OCP circuit trips. This will cause the power supply’s output current to drop to zero and the **OCP** annunciator to *blink*. The “OCP TRIPPED” message also appears on the display.

Clearing the Overcurrent Condition

When the OCP condition occurs (the “OCP TRIPPED” message is shown on the display), the **OCP** annunciator blinks. When it was caused by external voltage source such as a battery, disconnect it first. The following steps show how to clear the overcurrent conditions and get back to normal mode operation. In the following steps, the display will go back to "OCP TRIPPED" if you let the display time out after about several seconds.

Over Current or Display Limit

1 Readjust the OCP trip level or the output current level.

Lower the output current level below the OCP trip point after pressing the Display Limit or raise the OCP trip level by using the knob after pressing the Over Current key.

2 Move to the clear mode.

```
ocp on
```

You will see the above message after pressing the Over Current key. If you changed the output current level, press the Over Current key twice. Turn the knob to the right until the "OCP CLEAR" appears on the display.

Over Current

3 Clear the overcurrent condition and exit this menu.

Now, when you press Over Current key again, the "DONE" message is displayed for a second and the **OCP** annunciator will not blink any more. The output will return to meter mode.

- *Remote interface operation:*

`CURR:PROT {<current>|MIN|MAX}`	*Set the OCP level*
`CURR:PROT:STAT {OFF|ON}`	*Disable or enable the OCP circuit*
`CURR:PROT:CLE`	*Clear the tripped OCP circuit*

Remote Voltage Sensing

Remote voltage sensing is used to maintain regulation at the load and reduce the degradation of regulation that would occur due to the voltage drop in the leads between the power supply and the load.

By connecting the power supply for remote voltage sensing, voltage is sensed at the load rather than at the power supply's output terminals. This will allow the power supply to automatically compensate for the voltage drop in applications with long lead lengths as well as to accurately read back the voltage directly across the load.

When the power supply is connected for remote sensing, the OVP circuit senses the voltage at the *sensing* points (load) and not the output terminals.

CV Regulation

The voltage load regulation specification in chapter 8 applies at the output terminals of the power supply. When remote sensing, add 5 mV to this specification for each 1 V drop between the positive sensing point and (+) output terminal due to the change in load current. Because the sense leads are part of the power supply's feedback path, keep the resistance of the sense leads at or below 0.5 Ω per lead to maintain the above specified performance.

Output Rating

The rated output voltage and current specifications in chapter 8 apply at the output terminals of the power supply. With remote sensing, any voltage dropped in the load leads must be added to the load voltage to calculate maximum output voltage. The performance specifications are not guaranteed when the maximum output voltage is exceeded. If the excessive demand on the power supply forces the power supply to lose regulation, the **Unreg** annunciator will turn on to indicate that the output is unregulated.

Output Noise

Any noise picked up on the sense leads also appears at the output of the power supply and may adversely affect the voltage load regulation. Twist the sense leads to minimize external noise pickup and run them parallel and close to the load leads. In noisy environments it may be necessary to shield the sense leads. Ground the shield at the power supply end only. *Do not use the shield as one of the sense conductors.*

Stability

Using remote sensing under certain combinations of load lead lengths and large load capacitances may cause your application to form a filter, which becomes part of the voltage feedback loop. The extra phase shift created by this filter can degrade the power supply's stability, resulting in poor transient response or loop instability. In severe cases, it may cause oscillations. To minimize this possibility, keep the load leads as short as possible and twist them together. As the sense leads are part of the power supply's programming feedback loop, accidental open-connections of sense or load leads during remote sensing operation have various unwanted effects. Provide secure and permanent connections.

Remote Voltage Sensing Connections

Remote voltage sensing requires connecting the load leads from output terminals to the load and connecting the sense leads from sense terminals to the load as shown below. Observe polarity when connecting the sensing leads to the load.

Notice that the metal shorting bars should be removed from the output and sense terminals for remote voltage sensing connections.

Note *For local voltage sensing connections, the sense leads must be connected to the output terminals.*

Note *During remote sensing setup, it is strongly recommended to power off (by presssing power ON/OFF button) the power supply to avoid undesirable damage to the load or the power supply.*

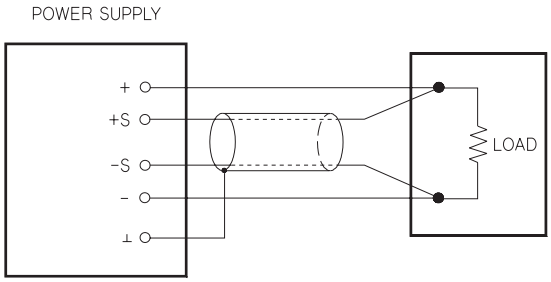

Figure 3-2. Remote Voltage Sensing Connections

Disabling the Output

The output of the power supply can be disabled or enabled from the front panel.

- When the power supply is in the "Off" state, the **OFF** annunciator turns on and the output is disabled. The **OFF** annunciator turns off when the power supply returns to the "On" state. When the output is disabled, the voltage value is 0 volts and the current value is 0.02 amps.
- The output state is stored in *volatile* memory; the output is always disabled when power has been off or after a remote interface reset.

> *While the output is disabled, the range selection keys, the control knob, resolution selection keys, and adjust selection key are still working. If the display is in the meter mode, you cannot see the changes of output voltage and current settings on the display when turning the knob. To see or check the changes when the outputs are disabled, the display should be in the limit mode.*

- *Front-panel operation:*

  You can disable the output by pressing `Output On/Off` key. This key toggles between output "Off" and "On" states.

- *Remote interface operation:*

  `OUTP {OFF|ON}` *Disable or enable the output*

Disabling the Output Using an External Relay

When the output of the E3632A is turned off, it is implemented by setting the output to 0 volts and 0.02 amps. This gives a zero output voltage without actually disconnecting the output. To disconnect the output an external relay must be connected between the output and the load. A TTL signal of either low true or high true is provided to control an external relay. This signal can only be controlled with the remote command `OUTPut:RELay {OFF|ON}`. The TTL output is available on the RS-232 connection pin 1 and pin 0.

When the `OUTPut:RELay` state is "ON", the TTL output of pin 1 is high (4.5 V) and pin 9 is low (0.5 V). The levels are reversed when the `OUTPut:RELay` state is "OFF".

Note *TTL output of pin 1 or pin 9 of the RS-232 connector is available only after installing two jumpers inside the power supply. See the Service Guide for more information.*

Note *Do not use the RS-232 interface if you have configured the power supply to output relay control signals. Internal components on the RS-232 circuitry may be damaged.*

Knob Locking

The knob locking function can be used to disable the knob, thereby preventing any unwanted changes during an experiment, or when you leave the power supply unattended. To disable the knob, press the resolution selection key until the blinking digit disappears.

Notice that the knob and front panel keys are disabled when in the remote interface mode.

System-Related Operations

This section gives information on topics such as self-test, error conditions, and front-panel display control. This information is not directly related to setting up the power supply but is an important part of operating the power supply.

Self-Test

A *power-on* self-test occurs automatically when you turn on the power supply. This test assures you that the power supply is operational. This test does not perform the extensive set of tests that are included as part of the complete self-test described below. If the power-on self-test fails, the **ERROR** annunciator turns on.

- A *complete* self-test performs a series of tests and takes approximately 2 seconds to execute. If all tests pass, you can have a high confidence that the power supply is operational.
- If the *complete* self-test is successful, "PASS" is displayed on the front panel. If the self-test fails, "FAIL" is displayed and the **ERROR** annunciator turns on. See the *Service Guide* for instructions on returning the power supply to Agilent Technologies for service.
- *Front-panel operation:*

  The *complete* self-test is enabled by pressing the [Recall] the(actually any front panel keys except the [Error] key) and the power-line switch simultaneously and then continuing to press the [Recall] key for 5 seconds. The complete self-test will be finished in 2 seconds.

- *Remote interface operation:*

  `*TST?`

  Returns "0" if the complete self-test passes or "1" if it fails.

Error Conditions

When the front-panel **ERROR** annunciator turns on, one or more command syntax or hardware errors have been detected. A record of up to 20 errors can be stored in the power supply's error queue. *See chapter 5 "Error Messages", starting on page 121 for a complete listing of the errors.*

- Errors are retrieved in first-in-first-out (FIFO) order. The first error returned is the first error that was stored. When you have read all errors from the queue, the **ERROR** annunciator turns off. The power supply beeps once each time an error is generated.
- If more than 20 errors have occurred when you operate the power supply over the remote interface, the last error stored in the queue (the most recent error) is replaced with -350, "*Too many errors*". No additional errors are stored until you remove errors from the queue. If no errors have occurred when you read the error queue, the power supply responds with +0, "*No error*" over the remote interface or "NO ERRORS" from the front panel.
- The error queue is cleared when power has been off or after a `*CLS` (clear status) command has been executed. The `*RST` (reset) command does not clear the error queue.
- *Front-panel operation:*

  If the **ERROR** annunciator is on, press the Error key repeatedly to read the errors stored in the queue. All errors are cleared when you read all errors.

  

- *Remote interface operation:*

  `SYST:ERR?` *Reads and error from the error queue*

  Errors have the following format (the error string may contain up to 80 characters).

  ```
  -113, "Undefined header"
  ```

Display Control

For security reasons, you may want to turn off the front-panel display. From the remote interface, you can display a 12-character message on the front panel.

The display can be enabled / disabled from the remote interface only.

- When the display is turned off, outputs are not sent to the display and all annunciators are disabled except the **ERROR** annunciator. Front-panel operation is otherwise unaffected by turning off the display.
- The display state is stored in *volatile* memory; the display is always enabled when power has been off, after a remote interface reset, or after returning to local from remote.
- You can display a message on the front panel by sending a command from the remote interface. The power supply can display up to 12 characters of the message on the front panel; any additional characters are truncated. Commas, periods, and semicolons share a display space with the preceding character, and *are not* considered individual characters. When a message is displayed, outputs are not sent to the display.
- Sending a message to the display from the remote interface overrides the display state; this means that you can display a message even if the display is turned off.

  The display state is automatically turned on when you return to the local (front panel) operation. Press Local key to return to the local state from the remote interface.

- *Remote interface operation:*

`DISP {OFF|ON}`	*Disable / enable the display*
`DISP:TEXT` *<quoted string>*	*Display the string enclosed in quotes*
`DISP:TEXT:CLE`	*Clear the displayed message*

The following statement shows how to display a message on the front panel from a Agilent Technologies controller.

```
"DISP:TEXT 'HELLO' "
```

Firmware Revision Query

The power supply has three microprocessors for control of various internal systems. You can query the power supply to determine which revision of firmware is installed for each microprocessor.

You can query the firmware revision from the remote interface only.

- The power supply returns four fields separated by commas and the fourth field is a revision code which contains three numbers. The first number is the firmware revision number for the main processor; the second is for the input/output processor; and the third is for the front-panel processor.
- *Remote interface operation:*

  `*IDN?` *Returns* `"HEWLETT-PACKARD,E3632A,0,X.X-X.X-X.X"`

  Be sure to dimension a string variable with at least 40 characters.

SCPI Language Version

The power supply complies with the rules and regulations of the present version of SCPI (Standard Commands for Programmable Instruments). You can determine the SCPI version with which the power supply is in compliance by sending a command from the remote interface.

You can query the SCPI version from the remote interface only.

- *Remote interface operation:*

  `SYST:VERS?` *Query the SCPI version*

  Returns a string in the form "YYYY.V" where the "Y's" represent the year of the version, and the "V" represents a version number for that year (for example, 1995.0).

Remote Interface Configuration

Before you can operate the power supply over the remote interface, you must configure the power supply for the remote interface. This section gives information on configuring the remote interface. For additional information on programming the power supply over the remote interface, See "Remote Interface Reference", starting on page 71 in chapter 4.

Remote Interface Selection

The power supply is shipped with both an GPIB (IEEE-488) interface and an RS-232 interface on the rear panel. Only one interface can be enabled at a time. The *GPIB interface* is selected when the power supply is shipped from the factory.

The remote interface can be selected from the front-panel only.

- The interface selection is stored in *non-volatile* memory, and *does not* change when power has been off or after a remote interface reset.
- If you select the GPIB interface, you must select a unique address for the power supply. The current address is displayed momentarily on the front panel when you turn on the power supply.[1]
- Your GPIB bus controller has its own address. Be sure to avoid using the bus controller's address for any instrument on the interface bus. Agilent Technologies controllers generally use address "21".
- If you enable the RS-232 interface, you must select the baud rate and parity to be used. "RS-232" is displayed momentarily on the front panel when you turn on the power supply if you have selected this interface.[2]

[1]*Refer to "GPIB Interface Configuration" starting on page 61 for more information on connecting the power supply to a computer over the GPIB interface.*

[2]*Refer to "RS-232 Interface Configuration" starting on page 62 for more information on connecting the power supply to a computer over the RS-232 interface.*

GPIB Address

Each device on the GPIB (IEEE-488) interface must have a unique address. You can set the power supply's address to any value between 0 and 30. The current address is displayed momentarily on the front panel when you turn on the power supply. The address is set to "05" when the power supply is shipped from the factory.

The GPIB address can be set from the front-panel only.

- The address is stored in *non-volatile* memory, and *does not* change when power has been off or after a remote interface reset.
- Your GPIB bus controller has its own address. Be sure to avoid the bus controller's address for any instrument on the interface bus. Agilent Technologies controllers generally use address "21".

Baud Rate Selection (RS-232)

You can select one of six baud rates for RS-232 operation. The rate is set to *9600 baud* when the power supply is shipped from the factory.

The baud rate can be set from the front-panel only.

- Select one of the following: 300, 600, 1200, 2400, 4800, **9600** baud. *The factory setting is 9600 baud.*
- The baud rate selection is stored in *non-volatile* memory, and *does not* change when power has been off or after a remote interface reset.

Parity Selection (RS-232)

You can select the parity for RS-232 operation. The power supply is configured for *no parity and 8 data bits* when shipped from the factory.

The parity can be set from the front-panel only.

- Select one of the following: **None** (*8 data bits*), Even (*7 data bits*), or Odd (*7 data bits*). When you set the parity, you are indirectly setting the number of data bits.
- The parity selection is stored in *non-volatile* memory, and *does not* change when power has been off or after a remote interface reset.

To Set the GPIB Address

To configure the power supply for the GPIB interface, proceed as follows:

I/O Config

1 Turn on the remote configuration mode.

GPIB / 488

You will see the above message on the front-panel display if the power supply has not been changed from the factory setting. If "RS-232" appears, choose "GPIB / 488" by turning the knob to the right.

I/O Config

2 Move to the GPIB address setting mode.

ADDR 05

The address is set to "05" when the power supply is shipped from the factory. Notice that a different GPIB address may appear if the power supply has been changed from the factory setting.

3 Turn the knob to change the GPIB address.

The displayed address is changed when turning the knob to the right or left.

I/O Config

4 Save the change and turn off the I/O configuration mode.

CHANGE SAVED

The address is stored in *non-volatile* memory, and *does not* change when power has been off or after a remote interface reset. The power supply displays a message to show that the change is now in effect. If the GPIB address is not changed, "NO CHANGE" will be displayed for one second.

Note

To exit the I/O configuration mode without any further changes, press the "I/O Config" key until the "NO CHANGE" message is displayed.

To Set the Baud Rate and Parity (RS-232)

To configure the power supply for the RS-232 interface, proceed as follows:

I/O Config

1 Turn on the remote configuration mode.

```
GPIB / 488
```

You will see the above message on the display if the power supply has not been changed from the factory setting.

Notice that if you changed the remote interface selection to RS-232 before, "RS-232" message will be displayed.

2 Choose the RS-232 interface. ◯

```
RS-232
```

You can choose the RS-232 interface by turning the knob to the left.

I/O Config

3 Move to the RS-232 interface setting mode and select the baud rate.

```
9600  BAUD
```

The rate is set to **9600** baud when the power supply is shipped from the factory. Choose from one of the following by turning the knob to the right or left: 300, 600, 1200, 2400, 4800, or **9600** baud.

I/O Config

4 Save the change and choose the parity. ◯

```
NONE  8 BITS
```

The power supply is configured for **8** data bits with no parity when shipped from the factory. Choose from one of the following by turning the knob to the right or left: **None 8 Bits**, Odd 7 Bits, or Even 7 Bits. When you set parity, you are indirectly setting the number of the data bits.

I/O Config

5 Save the change and turn off the I/O configuration mode.

CHANGE SAVED

The RS-232 baud rate and parity selections are stored in *non-volatile* memory, and *does not* change when power has been off or after a remote interface reset. The power supply displays a message to show that the change is now in effect. If the baud rate and the parity are not changed, "NO CHANGE" will be displayed for one second.

Note

To exit the I/O configuration mode without any further changes, press the "I/O Config" key until the "NO CHANGE" message is displayed.

GPIB Interface Configuration

The GPIB connector on the rear panel connects your power supply to the computer and other GPIB devices. Chapter 1 lists the cables that are available from Agilent Technologies. An GPIB system can be connected together in any configuration (star, linear, or both) as long as the following rules are observed:

- The total number of devices including the computer is no more than 15.
- The total length of all the cables used is no more than 2 meter times the number of devices connected together, up to a maximum of 20 meters.

Note *IEEE-488 states that you should exercise caution if your individual cable lengths exceed 4 meters.*

Do not stack more than three connector blocks together on any GPIB connector. Make sure that all connectors are fully seated and that the lock screws are firmly finger tightened.

RS-232 Interface Configuration

You connect the power supply to the RS-232 interface using the 9-pin (DB-9) serial connector on the rear panel. The power supply is configured as a DTE (Data Terminal Equipment) device. For all communications over the RS-232 interface, the power supply uses two handshake lines: DTR (Data Terminal Ready, on pin 4) and DSR (*Data Set Ready*, on pin 6).

The following sections contain information to help you use the power supply over the RS-232 interface. The programming commands for RS-232 are explained on page 99.

RS-232 Configuration Overview

Configure the RS-232 interface using the parameters shown below. Use the front-panel I/O Config key to select the baud rate, parity, and number of data bits (see page 59 for more information to configure from the front panel).

- Baud Rate: 300, 600, 1200, 2400, 4800, or **9600** baud (*factory setting*)
- Parity and Data Bits: **None / 8 data bits** (*factory setting*)
  Even / 7 data bits, or
  Odd / 7 data bits
- Number of Start Bits: **1 bit** (*fixed*)
- Number of Stop Bits: **2 bits** (*fixed*)

RS-232 Data Frame Format

A character *frame* consists of all the transmitted bits that make up a single character. The frame is defined as the characters from the *start bit* to the last *stop bit*, inclusively. Within the frame, you can select the baud rate, number of data bits, and parity type. The power supply uses the following frame formats for seven and eight data bits.

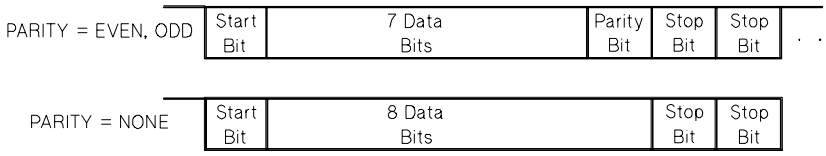

Connection to a Computer or Terminal

To connect the power supply to a computer or terminal, you must have the proper interface cable. Most computers and terminals are DTE (*Data Terminal Equipment*) devices. Since the power supply is also a DTE device, you must use a DTE-to-DTE interface cable. These cables are also called *null-modem*, *modem-eliminator*, or *crossover cables*.

The interface cable must also have the proper connector on each end and the internal wiring must be correct. Connectors typically have 9 pins (DB-9 connector) or 25 pins (DB-25 connector) with a "male" or "female" pin configuration. A male connector has pins inside the connector shell and a female connector has holes inside the connector shell.

If you cannot find the correct cable for your configuration, you may have to use a *wiring adapter*. If you are using a DTE-to-DTE cable, make sure the adapter is a "straight-through" type. Typical adapters include gender changers, null-modem adapters, and DB-9 to DB-25 adapters.

The cable and adapter diagrams shown below can be used to connect the power supply to most computers or terminals. If your configuration is different than those described, order the Agilent 34399A *Adapter Kit*. This kit contains adapters for connection to other computers, terminals, and modems. Instructions and pin diagrams are included with the adapter kit.

DB-9 Serial Connection If your computer or terminal has a 9-pin serial port with a male connector, use the null-modem cable included with the *Agilent 34398A Cable Kit*. This cable has a 9-pin female connector on each end. The cable pin diagram is shown below.

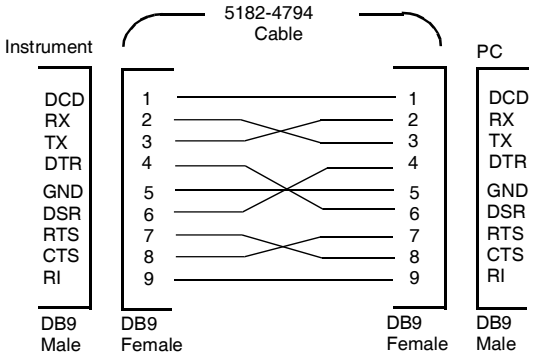

DB-25 Serial Connection If your computer or terminal has a 25-pin serial port with a male connector, use the null-modem cable and 25-pin adapter included with the *Agilent 34398A Cable Kit*. The cable and adapter pin diagram are shown below.

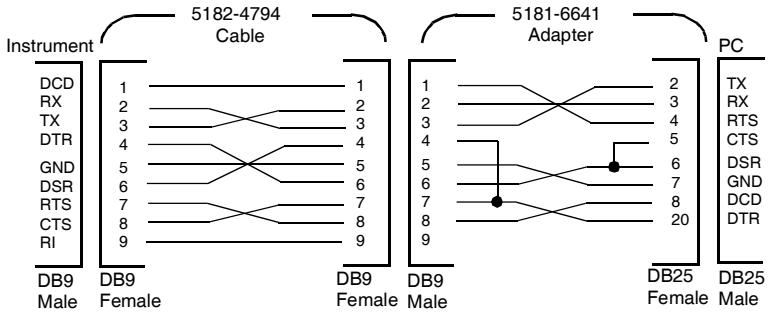

DTR / DSR Handshake Protocol

The power supply is configured as a DTE (*Data Terminal Equipment*) device and uses the DTR (*Data Terminal Ready*) and DSR (*Data Set Ready*) lines of the RS-232 interface to handshake. The power supply uses the DTR line to send a hold-off signal. The DTR line must be TRUE before the power supply will accept data from the interface. When the power supply sets the DTR line FALSE, the data must cease within 10 characters.

To disable the DTR/DSR handshake, *do not* connect the DTR line and tie the DSR line to logic TRUE. If you disable the DTR/DSR handshake, also select a slower baud rate to ensure that the data is transmitted correctly.

The power supply sets the DTR line FALSE in the following cases:

1 When the power supply's input buffer is full (when approximately 100 characters have been received), it sets the DTR line FALSE (pin 4 on the RS-232 connector). When enough characters have been removed to make space in the input buffer, the power supply sets the DTR line TRUE, unless the second case (see next) prevents this.

2 When the power supply wants to "talk" over the interface (which means that it has processed a query) and has received a <*new line*> message terminator, it will set the DTR line FALSE. This implies that once a query has been sent to the power supply, the bus controller should read the response before attempting to send more data. It also means that a <*new line*> must terminate the command string. After the response has been output, the power supply sets the DTR line TRUE again, unless the first case (see above) prevents this.

The power supply monitors the DSR line to determine when the bus controller is ready to accept data over the interface. The power supply monitors the DSR line (pin 6 on the RS-232 connector) before each character is sent. The output is suspended if the DSR line is FALSE. When the DSR line goes TRUE, transmission will resume.

The power supply holds the DTR line FALSE while output is suspended. A form of interface *deadlock* exists until the bus controller asserts the DSR line TRUE to allow the power supply to complete the transmission. You can break the interface deadlock by sending the <*Ctrl-C*> character, which clears the operation in progress and discards pending output (this is equivalent to the IEEE-488 device clear action).

For the <Ctrl-C> character to be recognized reliably by the power supply while it holds DTR FALSE, the bus controller must first set DSR FALSE.

RS-232 Troubleshooting

Here are a few things to check if you are having problems communicating over the RS-232 interface. If you need additional help, refer to the documentation that came with your computer.

- Verify that the power supply and your computer are configured for the same baud rate, parity, and number of data bits. Make sure that your computer is set up for *1 start* bit and *2 stop bits* (these values are fixed on the power supply).
- Make sure to execute the `SYSTem:REMote` command to place the power supply in the remote mode.
- Verify that you have connected the correct interface cable and adapters. Even if the cable has the proper connectors for your system, the internal wiring may be incorrect. The *Agilent Technologies 34398A Cable Kit* can be used to connect the power supply to most computers or terminals.
- Verify that you have connected the interface cable to the correct serial port on your computer (COM1, COM2, etc).

Calibration Overview

This section gives an overview of the calibration features of the power supply. For more detailed discussion of the calibration procedures, see the *Service Guide*.

Calibration Security

This feature allows you to enter a security code to prevent accidental or unauthorized calibrations of the power supply. When you first receive your power supply, it is secured. Before you can calibrate the power supply, you must unsecure it by entering the correct security code.

- *The security code* is set to "HP003632" *when the power supply is shipped from the factory*. The security code is stored in *non-volatile* memory, and *does not* change when power has been off or after a remote interface reset.
- To secure the power supply from the *remote interface*, the security code may contain up to 12 alphanumeric characters as shown below. The first character *must be a letter*, but the remaining characters can be letters or numbers. You do not have to use all 12 characters but the first character must always be a *letter*.

  A _ _ _ _ _ _ _ _ _ _ _ _ (*12 characters*)

- To secure the power supply from the *remote interface* so that it can be unsecured from the front panel, use the eight-character format shown below. The first two characters must be "H P" and the remaining characters must be numbers. Only the last six characters are recognized from the front panel, but all eight characters are required. *To unsecure the power supply from the front panel, omit the "H P" and enter the remaining numbers as shown on the following pages.*

  H P _ _ _ _ _ _ (*8 characters*)

> *If you forget your security code, you can disable the security feature by adding a jumper inside the power supply, and then entering a new code. See the Service Guide for more information.*

To Unsecure for Calibration You can unsecure the power supply for calibration either from the front panel or over the remote interface. *The power supply is secured when shipped from the factory, and the security code is set to "HP003632".*

- *Front-Panel Operation:*



If the power supply is secured, you will see the above message for one second by holding the [Calibrate] key for 5 seconds when you turn on the power supply. To unsecure the power supply, press the [Secure] key after the "CAL MODE" message is displayed in the calibration mode, enter the security code using the knob and resolution selection keys, and then press the [Secure] key.



When you press the [Secure] key to save the change, you will see the message below for one second if the security code is correct. The unsecured setting is stored in *non-volatile* memory, and *does not* change when power has been off or after a remote interface reset. *To exit the calibration mode, turn the power off and on.*

Notice that if the security is incorrect, the power supply displays an "INVALID" message for a second and returns to the code entering mode for you to enter the correct code.



- *Remote Interface Operation:*

`CAL:SEC:STAT {OFF|ON},`*<code>* *Secure or unsecure the power supply*

To unsecure the power supply, send the above command with the same code used to secure. For example,

```
"CAL:SEC:STAT OFF, HP003632"
```

To Secure Against Calibration You can secure the power supply against calibration either from the front panel or over the remote interface. *The power supply is secured when shipped from the factory, and the security code is set to "HP003632".*

Be sure to read the security code rules on page 66 before attempting to secure the power supply.

- *Front-Panel Operation:*

UNSECURED

If the power supply is unsecured, you will see the above message for one second by holding the Calibrate key for 5 seconds when you turn on the power supply. To secure the power supply, press the Secure key after the "CAL MODE" message is displayed in the calibration mode, enter the security code using the *knob* and *resolution selection keys*, and then press the Secure key.

Notice that you should omit the "H P" and enter the remaining numbers as shown below.

000000 CODE

When you press Secure key to save the change, you will see the message below. The secured setting is stored in *non-volatile* memory, and *does not* change when power has been off or after a remote interface reset. To exit the calibration mode, turn the power off and on.

SECURED

- *Remote Interface Operation:*

`CAL:SEC:STAT {OFF|ON},<code>` *Secure or unsecure the power supply*

To secure the power supply, send the above command with the same code as used to unsecure. For example,

```
"CAL:SEC:STAT ON, HP003632"
```

To Change the Security Code To change the security code, you must first unsecure the power supply, and then enter a new code.

Be sure to read the security code rules on page 66 before attempting to secure the power supply.

- *Front-Panel Operation:*

  To change the security code, first make sure that the power supply is *unsecured.* Press [Secure] key after the "CAL MODE" message is displayed in the calibration mode, enter the new security code using the knob and resolution selection keys, then press [Secure] key.

  Changing the code from the front panel also changes the code required from the remote interface.

- *Remote Interface Operation:*

  `CAL:SEC:CODE` *<new code>Change the security code*

  To change the security code, first unsecure the power supply using the old security code. Then, enter the new code. For example,

```
"CAL:SEC:STAT OFF, HP003632*"      Unsecure with old code
"CAL:SEC:CODE ZZ001443"            Enter new code
"CAL:SEC:STAT ON, ZZ00143"         Secure with new code
```

Calibration Count

You can determine the number of times that your power supply has been calibrated. Your power supply was calibrated before it left the factory. When you receive your power supply, read the count to determine its initial value.

The calibration count feature can be performed from the remote interface only.

- The calibration count is stored in *non-volatile* memory, and *does not* change when power has been off or after a remote interface reset.
- The calibration count increments up to a maximum of 32,767 after which it wraps-around to 0. Since the value increments by one for each calibration point, a complete calibration will increase the value by 5 counts.

- *Remote Interface Operation:*

`CAL:COUN?` *Query the number of times of calibration*

Calibration Message

You can use the calibration message feature to record calibration information about your power supply. For example, you can store such information as the last calibration date, the next calibration due date, the power supply's serial number, or even the name and phone number of the person to contact for a new calibration.

You can record and read information in the calibration message from the remote interface only.

- The power supply should be unsecured before sending a calibration message.
- The calibration message may contain up to 40 characters.
- The calibration message is stored in *non-volatile* memory, and *does not* change when power has been off or after a remote interface reset.

- *Remote Interface Operation:*

`CAL:STR` *<quoted string> Store the cal message*

The following command string shows how to store a calibration message.

```
"CAL:STR 'CAL 05-1-97' "
```

4

Remote Interface Reference

Remote Interface Reference

- SCPI Command Summary, page 73
- Simplified Programming Overview, page 78
- Using the APPLy Command, page 81
- Output Setting and Operation Commands, page 82
- Triggering Commands, page 89
- System-Related Commands, page 92
- Calibration Commands, page 96
- RS-232 Interface Commands, page 99
- The SCPI Status Registers, page 100
- Status Reporting Commands, page 108
- An Introduction to the SCPI Language, page 111
- Halting an Output in Progress, page 116
- SCPI Conformance Information, page 117
- IEEE-488 Conformance Information, page 120



If you are a first-time user of the SCPI language, you may want to refer to these sections to become familiar with the language before attempting to program the power supply.

SCPI Command Summary

This section summarizes the SCPI (*Standard Commands for Programmable Instruments*) commands available to program the power supply over the remote interface. Refer to the later sections in this chapter for more complete details on each command.

Throughout this manual, the following conventions are used for SCPI command syntax.

- Square brackets ([ ]) indicate optional keywords or parameters.
- Braces ({ }) enclose parameters within a command string.
- Triangle brackets (< >) indicate that you must substitute a value or a code for the enclosed parameter.
- A vertical bar (|) separates one of two or more alternative parameters.



First-time SCPI users, see page 111.

Output Setting and Measurement Commands

```
APPLy {<voltage>|DEF|MIN|MAX}[,{<current>|DEF|MIN|MAX}]
APPLy?
[SOURce:]
  CURRent[:LEVel][:IMMediate][:AMPLitude]{<current>|MIN|MAX|UP|DOWN}
  CURRent[:LEVel][:IMMediate][:AMPLitude]? [MIN|MAX]
  CURRent[:LEVel][:IMMediate]:STEP[:INCRement]
    {<numeric value> |DEFault}
  CURRent[:LEVel][:IMMediate]:STEP[:INCRement]? {DEFault}
  CURRent[:LEVel]:TRIGgered[:AMPLitude] {<current>|MIN|MAX}
  CURRent[:LEVel]:TRIGgered[:AMPLitude]? [MIN|MAX]
  CURRent:PROTection[:LEVel] {<current>|MIN|MAX}
  CURRent:PROTection[:LEVel]? {MIN|MAX}
  CURRent:PROTection:STATe {0|1|OFF|ON}
  CURRent:PROTection:STATe?
  CURRent:PROTection:TRIPped?
  CURRent:PROTection:CLEar
  VOLTage[:LEVel][:IMMediate][:AMPLitude]{<voltage>|MIN|MAX|UP|DOWN}
  VOLTage[:LEVel][:IMMediate][:AMPLitude]? [MIN|MAX]
  VOLTage[:LEVel][:IMMediate]:STEP[:INCRement]
    {<numeric value>|DEFault}
  VOLTage[:LEVel][:IMMediate]:STEP[:INCRement]? {DEFault}
  VOLTage[:LEVel]:TRIGgered[:AMPLitude] {<voltage>|MIN|MAX}
  VOLTage[:LEVel]:TRIGgered[:AMPLitude]? [MIN|MAX]
  VOLTage:PROTection[:LEVel] {<voltage>|MIN|MAX}
  VOLTage:PROTection[:LEVel]? {MIN|MAX}
  VOLTage:PROTection:STATe {0|1|OFF|ON}
  VOLTage:PROTection:STATe?
  VOLTage:PROTection:TRIPped?
  VOLTage:PROTection:CLEar
  VOLTage:RANGe {P15V|P30V|LOW|HIGH}
  VOLTage:RANGe?
MEASure
 :CURRent[:DC]?
[:VOLTage][:DC]?
```

Triggering Commands

```
INITiate[:IMMediate]
TRIGger[:SEQuence]
  :DELay {<seconds>|MIN|MAX}
  :DELay?
  :SOURce {BUS|IMM}
  :SOURce?
*TRG
```

System-Related Commands

```
DISPlay[:WINDow]
 [:STATe] {OFF|ON}
 [:STATe]?
  :TEXT[:DATA] <quoted string>
  :TEXT[:DATA]?
  :TEXT:CLEar
SYSTem
  :BEEPer[:IMMediate]
  :ERRor?
  :VERSion?
OUTPut
  :RELay[:STATe] {OFF|ON}
  :RELay[:STATe]?
 [:STATe] {OFF|ON}
 [:STATe]?

*IDN?
*RST
*TST?
*SAV {1|2|3}
*RCL {1|2|3}
```

Calibration Commands

```
CALibration
  :COUNt?
  :CURRent[:DATA] <numeric value>
  :CURRent:LEVel {MIN|MID|MAX}
  :CURRent:PROTection
  :DAC:ERRor
  :SECure:CODE <new code>
  :SECure:STATe {OFF|ON},<code>
  :SECure:STATe?
  :STRing <quoted string>
  :STRing?
  :VOLTage[:DATA] <numeric value>
  :VOLTage:LEVel {MIN|MID|MAX}
  :VOLTage:PROTection
```

Status Reporting Commands

```
STATus:QUEStionable
  :CONDition?
 [:EVENt]?
  :ENABle <enable value>
  :ENABle?
SYSTem:ERRor?
*CLS
*ESE <enable value>
*ESE?
*ESR?
*OPC
*OPC?
*PSC {0|1}
*PSC?
*SRE <enable value>
*SRE?
*STB?
*WAI
```

RS-232 Interface Commands

```
SYSTem
  :LOCal
  :REMote
  :RWLock
```

IEEE-488.2 Common Commands

```
*CLS
*ESE <enable value>
*ESE?
*ESR?
*IDN?
*OPC
*OPC?
*PSC {0|1}
*PSC?
*RST
*SAV {1|2|3}
*RCL {1|2|3}
*SRE <enable value>
*SRE?
*STB?
*TRG
*TST?
*WAI
```

Simplified Programming Overview

This section gives an overview of the basic techniques used to program the power supply over the remote interface. This section is only an overview and does not give all of the details you will need to write your own application programs. Refer to the remainder of this chapter and also chapter 6, "Application Programs", for more details and examples. Also refer to the programming reference manual that came with your computer for details on outputting command strings and entering data.

Using the APPLy Command

The `APPLy` command provides the most straightforward method to program the power supply over the remote interface. For example, the following statement executed from your computer will set the power supply to an output of 3 V rated at 1 A:

```
"APPL 3.0, 1.0"
```

Using the Low-Level Commands

Although the `APPLy` command provides the most straightforward method to program the power supply, the low-level commands give you more flexibility to change individual parameters. For example, the following statements executed from your computer will set the power supply to an output of 3 V rated at 1 A:

```
"VOLT 3.0"          Set output voltage to 3.0 V
"CURR 1.0"          Set output current to 1.0 A
```

Reading a Query Response

Only the query commands (commands that end with " ? ") will instruct the power supply to send a response message. Queries return either output values or internal instrument settings. For example, the following statements executed from your computer will read the power supply's error queue and print the most recent error:

`dimension statement`	*Dimension string array (80 elements)*
`"SYST:ERR?"`	*Read error queue*
`bus enter statement`	*Enter error string into computer*
`print statement`	*Print error string*

Selecting a Trigger Source

The power supply will accept a "bus" (software) trigger or an immediate internal trigger as a trigger source. By default, the "BUS" trigger source is selected. If you want the power supply to use an immediate internal trigger, you must select "IMMediate". For example, the following statements executed from your computer will set to an output of 3 V/1 A immediately:

`"VOLT:TRIG 3.0"`	*Set the triggered voltage level to 3.0 V*
`"CURR:TRIG 1.0"`	*Set the triggered current level to 1.0 A*
`"TRIG:SOUR IMM"`	*Select the immediate trigger as a source*
`"INIT"`	*Cause the trigger system to initiate*

Power Supply Programming Ranges

The `SOURce` subsystem requires parameters for programming values. The available programming value for a parameter varies according to the desired output range of the power supply. The following table lists the programming values available and MINimum, MAXimum, DEFault and reset values of the Agilent E3632A power supply.

Refer to this table to identify programming values when programming the power supply.

Table 4-1. Agilent E3632A Programming Ranges

		0 - 15V/7A Range	0 - 30V/4A Range
Voltage	**Programming Range**	0 V to 15.45V	0 V to 30.9 V
	MAX Value	15.45 V	30.9 V
	MIN Value	0 V	0 V
	DEFault Value	0 V	0 V
	***RST Value**	0 V	
Current	**Programming Range**	0 A to 7.21 A	0 A to 4.12 A
	MAX Value	7.21 A	4.12 A
	MIN Value	0 A	0 A
	DEFault Value	7 A	4 A
	***RST**	7 A	

Using the APPLy Command

The APPLy command provides the most straightforward method to program the power supply over the remote interface. You can select the output voltage and current in one command.

APPLy {<*voltage*>| DEF | MIN | MAX}[,{<*current*>| DEF | MIN | MAX}]

This command is combination of VOLTage and CURRent commands. As long as the newly programmed values are within the presently selected range, the output voltage and current are changed as soon as the command is executed.

The APPLy command changes the power supply's output to the newly programmed values only if the programmed values are valid within the presently selected range. An execution error will occur if the programmed values are not valid within the selected range.

You can substitute "MINimum", "MAXimum", or "DEFault" in place of a specific value for the *voltage* and *current* parameters. MIN selects the lowest values of "0" volts and "0" amps. MAX selects the highest values allowed for the selected range.

The *default* values of voltage and current are "0" volts and "7" amps regardless of the presently selected range. *See Table 4-1 for details of parameters.*

If you specify only one parameter of the APPLy command, the power supply regards it as voltage setting value.

APPLy?

This command queries the power supply's present *voltage* and *current* setting values and returns a quoted string. The voltage and current are returned in sequence as shown in the sample string below (the quotation marks are returned as part of the string).

```
"15.00000,4.00000"
```

In the above string, the first number 15.00000 is the voltage setting value and the second number 4.00000 is the current setting value.

Output Setting and Operation Commands

This section describes low-level commands used to program the power supply. Although the APPLy command provides the most straightforward method to program the power supply, the low-level output setting commands give you more flexibility to change the individual parameters.

CURRent{<*current*>|MINimum | MAXimum|UP|DOWN}

This command programs the immediate current level of the power supply. The immediate level is the current value of the output terminals.

The CURRent command changes the output of the power supply to the newly programmed value regardless of the output range presently selected.

You can substitute "MINimum" or "MAXimum" in place of a specific value for the current parameter. MIN selects the lowest current values of "0" amps. MAX selects the highest current values allowed for the selected range.

This command also increases or decreases the immediate current level using the "UP" or "DOWN" parameter by a predetermined amount. The command CURRent:STEP sets the amount of increase or decrease. Notice that a new increment setting will cause an execution error -222 (Data out of range) when the maximum or the minimum rated current is exceeded.

CURRent Example

The following program segments show how to use the CURR UP or CURR DOWN command to increase or decrease the output current with the CURR:STEP command.

```
"CURR:STEP 0.01"        Set the step size to 0.01 A
"CURR UP"               Increase the output current

"CURR:STEP 0.02"        Set the step size to 0.02 A
"CURR DOWN"             Decrease the output current
```

CURRent? [MINimum | MAXimum]

This query returns the presently programmed current level of the power supply. `CURR? MAX` and `CURR? MIN` return the highest and lowest *programmable* current levels for the selected range.

CURRent:STEP {<*numeric value*>|DEFault}

This command sets the step size for current programming with the `CURRent UP` and `CURRent DOWN` commands. See the example in the previous page.

To set the step size to the minimum resolution, set the step size to "DEFault". The minimum resolution of the step size is approximately 0.12 mA. The `CURR:STEP? DEF` returns the minimum resolution of your instrument. The immediate current level increases or decreases by the value of the step size. For example, the output current will increase or decrease 10 mA if the step size is 0.01.

This command is useful when you program the power supply to the *allowed* minimum resolution. At `*RST`, the step size is the value of the minimum resolution.

CURRent:STEP? {DEFault}

This query returns the value of the step size currently specified. The returned parameter is a numeric value. "DEFault" gives the minimum resolution of the step size in unit of amps.

CURRent:TRIGgered {<*current*>| MINimum | MAXimum}

This command programs the pending triggered current level. The pending triggered current level is a *stored* value that is transferred to the output terminals when a trigger occurs. A pending triggered level is not affected by subsequent `CURRent` commands.

CURRent:TRIGgered? [MINimum | MAXimum]

This query returns the triggered current level presently programmed. If no triggered level is programmed, the `CURRent` level is returned. `CURR:TRIG? MAX` and `CURR:TRIG? MIN` return the highest and lowest *programmable* triggered current levels.

CURRent:PROTection {<*current*>|MINimum|MAXimum}

This command sets the current level at which the overcurrent protection (OCP) circuit will trip. If the peak output current exceeds the OCP level, then the output current is programmed to zero. The Questionable Status register "OC" bit is set (see page 101). An overcurrent condition can be cleared with the `CURR:PROT:CLE` command after the condition that caused the OCP trip is removed.

CURRent:PROTection? {MINimum|MAXimum}

This query returns the overcurrent protection trip level presently programmed. `CURR:PROT? MAX` and `CURR:PROT? MIN` return the maximum and minimum programmable overcurrent trip levels.

CURRent:PROTection:STATe {0|1|OFF|ON}

This command enables or disables the overcurrent protection function of the power supply. An overcurrent condition can be cleared with the `CURR:PROT:CLE` command after the condition that caused the OCP trip is removed. At `*RST`, this value is set to "ON".

CURRent:PROTection:STATe?

This query returns the state of the overcurrent protection function. The returned parameter is "0" (OFF) or "1" (ON).

CURRent:PROTection:TRIPped?

This query returns a "1" if the overcurrent protection circuit is tripped and not cleared or a "0" if not tripped.

CURRent:PROTection:CLEar

This command causes the overcurrent protection circuit to be cleared. After this command, the output current is restored to the state it was in before the current protection tripped and the OCP trip level remains unchanged to the value presently programmed. Before sending this command, lower the output current below the trip OCP point, or raise the OCP trip level above the output setting.

VOLTage {<*voltage*>| MINimum | MAXimum|UP|DOWN}

This command programs the immediate voltage level of the power supply. The immediate level is the voltage value of the output terminals.

The `VOLTage` command changes the output of the power supply to the newly programmed value regardless of the output range presently selected.

You can substitute "MINimum" or "MAXimum" in place of a specific value for the voltage parameter. MIN selects the lowest voltage values of "0" volts. `MAX` selects the highest voltage values allowed for the selected range.

This command also increases or decreases the immediate voltage level using the "UP" or "DOWN" parameter by a predetermined amount. The command `VOLTage:STEP` sets the amount of increase or decrease. Notice that a new increment setting will cause an execution error -222 (Data out of range) when the maximum or the minimum rated voltage is exceeded.

VOLTage Example

The following program segments show how to use the `VOLT UP` or `VOLT DOWN` command to increase or decrease the output voltage with the `VOLT:STEP` command.

```
"VOLT:STEP 0.01"     Set the step size to 0.01 V
"VOLT UP"            Increase the output voltage

"VOLT:STEP 0.02"     Set the step size to 0.02 V
"VOLT DOWN"          Decrease the output voltage
```

VOLTage? [MINimum | MAXimum]

This query returns the presently programmed voltage level of the power supply. `VOLT? MAX` and `VOLT? MIN` return the highest and lowest *programmable* voltage levels for the selected range.

VOLTage:STEP {<*numeric value*>|DEFault}

This command sets the step size for voltage programming with the `VOLT UP` and `VOLT DOWN` commands. See the above example in the previous page.

To set the step size to the minimum resolution, set the step size to "DEFault". The minimum resolution of the step size is approximately 0.55 mV. The `VOLT:STEP? DEF` returns the minimum resolution of your instrument. The immediate voltage level increases or decreases by the value of the step size. For example, the output voltage will increase or decrease 10 mV if the step size is 0.01.

This command is useful when you program the power supply to the *allowed* minimum resolution. At `*RST`, the step size is the value of the minimum resolution.

VOLTage:STEP? {DEFault}

This query returns the value of the step size currently specified. The returned parameter is a numeric value. "DEFault" gives the minimum resolution step size in unit of volts.

VOLTage:TRIGgered {<*voltage*>| MINimum | MAXimum}

This command programs the pending triggered voltage level. The pending triggered voltage level is a *stored* value that is transferred to the output terminals when a trigger occurs. A pending triggered level is not affected by subsequent `VOLTage` commands.

VOLTage:TRIGgered? [MINimum | MAXimum]

This query returns the triggered voltage level presently programmed. If no triggered level is programmed, the `VOLT` level is returned. `VOLT:TRIG? MAX` and `VOLT:TRIG? MIN` return the highest and lowest *programmable* triggered voltage levels.

VOLTage:PROTection {<*voltage*>|MINimum|MAXimum}

This command sets the voltage level at which the overvoltage protection (OVP) circuit will trip. If the peak output voltage exceeds the OVP level, then the power supply output is *shorted* by an internal SCR. The Questionable Status register "OV" bit is set (see page 101). An overvoltage condition can be cleared with the `VOLT:PROT:CLE` command after the condition that caused the OVP trip is removed.

VOLTage:PROTection? {MINimum|MAXimum}
This query returns the overvoltage protection trip level presently programmed. `VOLT:PROT? MAX` and `VOLT:PROT? MIN` return the maximum and minimum programmable overvoltage trip levels.

VOLTage:PROTection:STATe {0|1|OFF|ON}
This command enables or disables the overvoltage protection function. An overvoltage condition can be cleared with the `VOLT:PROT:CLE` command after the condition that caused the OVP trip is removed. At `*RST`, this value is set to "ON".

VOLTage:PROTection:STATe?
This query returns the state of the overvoltage protection function. The returned parameter is "0" (OFF) or "1" (ON).

VOLTage:PROTection:TRIPped?
This query returns a "1" if the overvoltage protection circuit is tripped and not cleared or a "0" if not tripped.

VOLTage:PROTection:CLEar
This command causes the overvoltage protection circuit to be cleared. After this command, the output voltage is restored to the state it was in before the protection feature occurred and the OVP trip level remains unchanged to the value presently programmed. Before sending this command, lower the output voltage below the trip OVP point, or raise the OVP trip level above the output setting.

VOLTage:RANGe {P15V|P30V||LOW|HIGH}
This command selects an output range to be programmed by the identifier. When 15V/7A range is selected, the *maximum programmable* voltage and current are limited to 15.45 volts and 7.21 amps. When 30V/4A range is selected, the *maximum programmable* voltage and current are limited to 30.09 volts and 4.12 amps. "P30V" or "HIGH" is the identifier for the 30V/4A range and "P15V" or "LOW" is for the 15V/7A range. At `*RST`, the 15V/7A range is selected.

VOLTage:RANGe?
This query returns the currently selected range. The returned parameter is "P30V" (HIGH) or "P15V" (LOW).

MEASure:CURRent?
This command queries the current measured across the current sense resistor inside the power supply.

MEASure[:VOLTage]?
This command queries the voltage measured at the sense terminals of the power supply.

Triggering Commands

The power supply's triggering system allows a change in voltage and current when receiving a trigger, to select a trigger source, and to insert a trigger. Triggering the power supply is a multi-step process.

- First, you must specify the source from which the power supply will accept the trigger. The power supply will accept a bus (software) trigger or an immediate trigger from the remote interface.
- Then, you can set the time delay between the detection of the trigger on the specified trigger source and the start of any corresponding output change. *Notice that the time delay is valid for only the bus trigger source.*
- Finally, you must provide an `INITiate` command. If the `IMMediate` source is selected, the selected output is set to the triggered level immediately. But if the trigger source is the bus, the power supply is set to the triggered level after receiving the Group Execute Trigger (GET) or `*TRG` command.

Trigger Source Choices

You must specify the source from which the power supply will accept a trigger. The trigger is stored in *volatile* memory; the source is set to bus when the power supply has been off or after a remote interface reset.

Bus (Software) Triggering

- To select the bus trigger source, send the following command.

```
TRIG:SOUR BUS
```

- To trigger the power supply from the remote interface (GPIB or RS-232) after selecting the bus source, send the `*TRG` (trigger) command. When the `*TRG` is sent, the trigger action starts after the specified time delay if any delay is given.

- You can also trigger the power supply from the GPIB interface by sending the IEEE-488 Group Execute Trigger (GET) message. The following statement shows how to send a GET from a Agilent Technologies controller.

```
TRIGGER 705 (group execute trigger)
```

- To ensure synchronization when the bus source is selected, send the `*WAI` (wait) command. When the `*WAI` command is executed, the power supply waits for all pending operations to complete before executing any additional commands. For example, the following command string guarantees that the first trigger is accepted and is executed before the second trigger is recognized.

```
TRIG:SOUR BUS;*TRG;*WAI;*TRG;*WAI
```

- You can use the `*OPC?` (operation complete query) command or the `*OPC` (operation complete) command to signal when the operation is complete. The `*OPC?` command returns "1" to the output buffer when the operation is complete. The `*OPC` command sets the "OPC" bit (bit 0) in the Standard Event register when the operation is complete.

Immediate Triggering

- To select the immediate trigger source, send the following command.

```
TRIG:SOUR IMM
```

- When the `IMMediate` is selected as a trigger source, an `INITiate` command immediately transfers the `VOLT:TRIG` or `CURR:TRIG` value to `VOLT` or `CURR` value. Any delay is ignored.

Triggering Commands

INITiate

This command causes the trigger system to initiate. This command completes one full trigger cycle when the trigger source is an immediate and initiates the trigger subsystem when the trigger source is bus.

TRIGger:DELay {<*seconds*>| MINimum | MAXimum}

This command sets the time delay between the detection of an event on the specified trigger source and the start of any corresponding trigger action on the power supply output. Select from 0 to 3600 seconds. MIN = 0 seconds. MAX = 3600 seconds. At `*RST`, this value is set to 0 seconds.

TRIGger:DELay?

This command queries the trigger delay.

TRIGger:SOURce {BUS | IMMediate}

This command selects the source from which the power supply will accept a trigger. The power supply will accept a bus (software) trigger or an internal immediate trigger. At `*RST`, the bus trigger source is selected.

TRIGger:SOURce?

This command queries the present trigger source. Returns "BUS" or "IMM".

*TRG

This command generates a trigger to the trigger subsystem that has selected a bus (software) trigger as its source `(TRIG:SOUR BUS)`. The command has the same effect as the Group Execute Trigger (GET) command. For RS-232 operation, make sure the power supply is in the remote interface mode by sending the `SYST:REM` command first.

System-Related Commands

DISPlay {OFF | ON}

This command turns the front-panel display off or on. When the display is turned off, outputs are not sent to the display and all annunciators are disabled except the **ERROR** annunciator.

The display state is automatically turned on when you return to the local mode. Press the Local key to return to the local state from the remote interface.

DISPlay?

This command queries the front-panel display setting. Returns "0" (OFF) or "1" (ON).

DISPlay:TEXT <*quoted string*>

This command displays a message on the front panel. The power supply will display up to 12 characters in a message; any additional characters are truncated. Commas, periods, and semicolons share a display space with the preceding character, and are not considered individual characters.

DISPlay:TEXT?

This command queries the message sent to the front panel and returns a quoted string.

DISPlay:TEXT:CLEar

This command clears the message displayed on the front panel.

OUTPut {OFF | ON}

This command enables or disables the outputs of the power supply. When the output is disabled, the voltage value is 0 V and the current value is 20 mA. At `*RST`, the output state is OFF.

OUTPut?

This command queries the output state of the power supply. The returned value is "0" (OFF) or "1" (ON).

OUTPut:RELay {OFF | ON}

This command sets the state of two TTL signals on the RS-232 connector. These signals are intended for use with an external relay and relay driver. The TTL output is available on the RS-232 connector pin 1 and pin 9. When the `OUTPut:RELay` state is "ON", the TTL output of pin 1 is high (4.5 V) and pin 9 is low (0.5 V). The levels are reversed when the `OUTPut:RELay` state is "OFF". At `*RST`, the `OUTPut:RELay` state is OFF.

Note *TTL output of pin 1 or pin 9 of the RS-232 connector is available only after installing two jumpers inside the power supply. See the Service Guide for more information.*

Note *Do not use the RS-232 interface if you have configured the power supply to output relay control signals. Internal components on the RS-232 circuitry may be damaged.*

OUTPut:RELay?

This command returns the state of the TTL relay logic signals. See also `OUTP:REL` command.

SYSTem:BEEPer

This command issues a single beep immediately.

SYSTem:ERRor?

This command queries the power supply's error queue. When the front-panel **ERROR** annunciator turns on, one or more command syntax or hardware errors have been detected. Up to 20 errors can be stored in the error queue. *See "Error Messages" for a complete listing of the errors in chapter 5.*

- Errors are retrieved in first-in-first-out (FIFO) order. The first error returned is the first error that was stored. When you have read all errors from the queue, the **ERROR** annunciator turns off. The power supply beeps once each time an error is generated.
- If more than 20 errors have occurred, the last error stored in the queue (the most recent error) is replaced with *-350, "Too many errors"*. No additional errors are stored until you remove errors from the queue. If no errors have occurred when you read the error queue, the power supply responds with *+0, "No error"*.
- The error queue is cleared when power has been off or after a `*CLS` (clear status) command has been executed. The `*RST` (reset) command *does not* clear the error queue.

SYSTem:VERSion?

This command queries the power supply to determine the present SCPI version. The returned value is of a string in the form YYYY.V where the "Y's" represent the year of the version, and the "V" represents a version number for that year (for example, 1995.0).

*IDN?

This query command reads the power supply's identification string. The power supply returns four fields separated by commas. The *first* field is the manufacturer's name, the *second* field is the model number, the *third* field is not used (always "0"), and the *fourth* field is a revision code which contains three numbers. The first number is the firmware revision number for the *main* power supply processor; the second is for the *input/output* processor; and the third is for the *front-panel* processor.

The command returns a string with the following format (be sure to dimension a string variable with at least *40 characters*):

```
HEWLETT-PACKARD,E3632A,0,X.X-X.X-X.X
```

*RST

This command resets the power supply to its power-on state as follows:

Command	state
CURR	7 A
CURR:STEP	0.12 mA (typical value)
CURR:TRIG	7 A
CURR:PROT	7.5 A
CURR:PROT:STAT	ON
DISP	ON
OUTP	OFF
OUTP:REL	OFF
TRIG:DEL	0
TRIG:SOUR	BUS
VOLT	0 V
VOLT:STEP	0.55 mV (typical value)
VOLT:TRIG	0 V
VOLT:PROT	32 V
VOLT:PROT:STAT	ON
VOLT:RANG	P15V (Low)

*TST?

This query performs a *complete* self-test of the power supply. Returns "0" if the self-test passes or "1" or any non-zero value if it fails. If the self-test fails, an error message is also generated with additional information on why the test failed.

*SAV { 1 | 2 | 3 }

This command stores the present state of the power supply to the specified location in *non-volatile* memory. Three memory locations (numbered 1, 2 and 3) are available to store operating states of the power supply. The state storage feature "remembers" the states or values of the following commands:

`CURR, CURR:STEP, CURR:TRIG, CURR:PROT, CURR:PROT:STAT DISP, OUTP, OUTP:REL, TRIG:DEL, TRIG:SOUR, VOLT, VOLT:STEP, VOLT:TRIG, VOLT:PROT, VOLT:PROT:STAT,` and `VOLT:RANG`

To recall a stored state, you must use the same memory location used previously to store the state.

*RCL { 1 | 2 | 3 }

This command recalls a previously stored state. To recall a stored state, you must use the same memory location used previously to store the state.

Note

`DISP {OFF|ON}` *can be stored and recalled in remote interface mode only. Going to local mode automatically sets the display state to ON.*

Calibration Commands

See chapter 3 "Calibration Overview", starting on page 66 for an overview of the calibration features of the power supply. For more detailed discussion of the calibration procedures, see the Service Guide.

Note *When you calibrate the power supply, you should not set the OVP and OCP to ON state in order to prevent OVP or OCP from tripping.*

CALibration:COUNt?

This command queries the power supply to determine the number of times it has been calibrated. Your power supply was calibrated before it left the factory. When you receive your power supply, read the count to determine its initial value. Since the value increments by one for each calibration point, a complete calibration will increase the value by 5 counts.

CALibration:CURRent <*numeric value*>

This command can only be used after calibration is unsecured and the output state is ON. It enters a current value that you obtained by reading an external meter. You must first select the minimum calibration level (`CAL:CURR:LEV MIN`) for the value being entered. You must then select the middle and maximum calibration levels (`CAL:CURR:LEV MID` and `CAL:CURR:LEV MAX`) for the value being entered. Three successive values must be selected and entered. The power supply then computes new calibration constants. These constants are then stored in *non-volatile* memory.

CALibration:CURRent:LEVel {MINimum | MIDdle|MAXimum}

This command can only be used after calibration is unsecured and the output state is ON. It sets the power supply to a calibration point that is entered with `CAL:CURR` command. During calibration, three points must be entered and the low-end point (MIN) must be selected and entered first.

CALibration:CURRent:PROTection

This command calibrates the overcurrent protection circuit of the power supply. It takes about 7 seconds to execute the command. The calibration must be unsecured and the output shorted before calibrating the overcurrent protection. The power supply automatically performs the calibration and stores the new overcurrent constant in *nonvolatile* memory. *Notice that current calibration precedes before sending this command.*

CALibration:DAC:ERRor
This command corrects the differential nonlinearity error of the internal DAC without an external meter. You must send this command before calibrating the voltage. It takes about 30 seconds to execute the command.

CALibration:SECure:CODE <*new code*>
This command enters a new security code. To change the security code, first unsecure the power supply using the old security code. Then, enter the new code. The calibration code may contain up to 12 characters over the remote interface but the first character must always be a *letter*.

CALibration:SECure:STATe {OFF | ON},<*code*>
This command unsecures or secures the power supply for calibration. The calibration code may contain up to 12 characters over the remote interface.

CALibration:SECure:STATe?
This command queries the secured state for calibration of the power supply. The returned parameter is "0" (OFF) or "1" (ON).

CALibration:STRing <*quoted string*>
This command records calibration information about your power supply. For example, you can store such information as the last calibration date, the next calibration due date, or the power supply's serial number. The calibration message may contain up to 40 characters. The power supply should be unsecured before sending a calibration message.

CALibration:STRing?
This command queries the calibration message and returns a quoted string.

CALibration:VOLTage[:DATA] <*numeric value*>
This command can only be used after calibration is unsecured and the output state is ON. It enters a voltage value that you obtained by reading an external meter. You must first select the minimum calibration level (`CAL:VOLT:LEV MIN`) for the value being entered. You must then select the middle and maximum calibration levels (`CAL:VOLT:LEV MID` and `CAL:VOLT:LEV MAX`) for the value being entered. Three successive values must be selected and entered. The power supply then computes new voltage calibration constants. These constants are then stored in *non-volatile* memory.

CALibration:VOLTage:LEVel {MINimum | MIDdle|MAXimum}

This command can only be used after calibration is unsecured and the output state is ON. It sets the power supply to a calibration point that is entered with `CAL:VOLT` command. During calibration, three points must be entered and the low-end point (MIN) must be selected and entered first.

CALibration:VOLTage:PROTection

This command calibrates the overvoltage protection circuit of the power supply. It takes about 7 seconds to execute the command. The calibration must be unsecured and the output be opened before calibrating the overvoltage protection circuit. The power supply automatically performs the calibration and stores the new overvoltage constant in *nonvolatile* memory. *Notice that voltage calibration precedes before sending this command.*

RS-232 Interface Commands

Use the front-panel "I/O Config" key to select the baud rate, parity, and the number of data bits (see chapter 3 "Remote Interface Configuration", starting on page 56).

SYSTem:LOCal

This command places the power supply in the local mode during RS-232 operation. All keys on the front panel are fully functional.

SYSTem:REMote

This command places the power supply in the remote mode for RS-232 operation. All keys on the front panel, except the "Local" key, are disabled.

> *It is very important that you send the* `SYST:REM` *command to place the power supply in the remote mode. Sending or receiving data over the RS-232 interface when not configured for remote operation can cause unpredictable results.*

SYSTem:RWLock

This command places the power supply in the remote mode for RS-232 operation. This command is the same as the `SYST:REM` command except that all keys on the front panel are disabled, including the "Local" key.

Ctrl-C

This command clears the operation in progress over the RS-232 interface and discards any pending output data. *This is equivalent to the IEEE-488 device clear action over the GPIB interface.*

The SCPI Status Registers

All SCPI instruments implement status registers in the same way. The status system records various instrument conditions in three register groups: the Status Byte register, the Standard Event register, and the Questionable Status register groups. The status byte register records high-level summary information reported in the other register groups. The diagram on the subsequent pages illustrates the SCPI status system used by the power supply.

What is an *Event* Register?

An *event register* is a read-only register that reports defined conditions within the power supply. Bits in an event register *are latched*. Once an event bit is set, subsequent state changes are ignored. Bits in an event register are automatically cleared by a query of that register (such as `*ESR?` or `STAT:QUES:EVEN?`) or by sending the `*CLS` (clear status) command. A reset (`*RST`) or device clear will not clear bits in event registers. Querying an event register returns a decimal value which corresponds to the binary-weighted sum of all bits set in the register.

What is an *Enable* Register?

An *enable register* defines which bits in the corresponding event register are logically ORed together to form a single summary bit. Enable registers are both readable and writable. Querying an enable register *will not* clear it. The `*CLS` (clear status) command does not clear enable registers but it does clear the bits in the event registers. To enable bits in an enable register, you must write a decimal value which corresponds to the binary-weighted sum of the bits you wish to enable in the register.

SCPI Status System

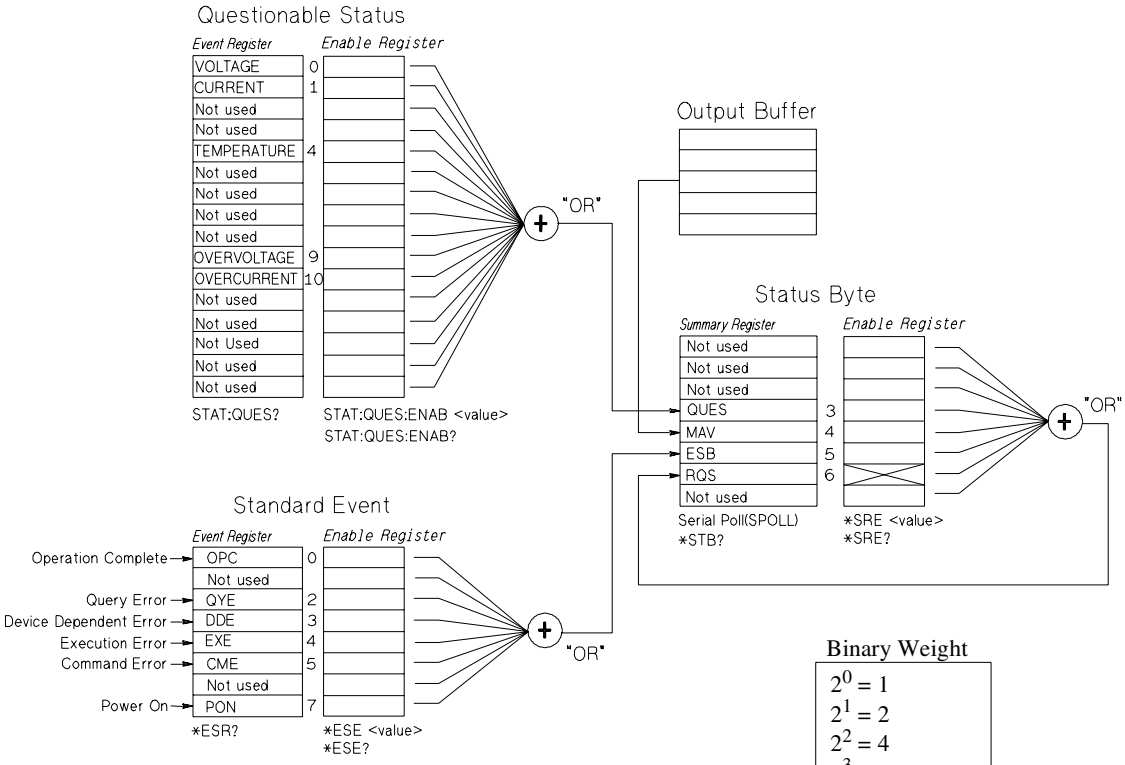

Binary Weight

$2^0 = 1$
$2^1 = 2$
$2^2 = 4$
$2^3 = 8$
$2^4 = 16$
$2^5 = 32$
$2^6 = 64$
$2^7 = 128$
$2^8 = 256$
$2^9 = 512$
$2^{10} = 1024$
$2^{11} = 2048$
$2^{12} = 4096$
$2^{13} = 8192$
$2^{14} = 16384$
$2^{15} = 32768$

The Questionable Status Register

The Questionable Status register provides information about voltage and current regulation. Bit 0 is set when the voltage becomes unregulated, and bit 1 is set if the current becomes unregulated. For example if the power supply momentarily goes to constant current mode when the power supply is operating as a voltage source (constant voltage mode), bit 0 is set to indicate that the voltage output is not regulated.

The Questionable Status register also provides information that the power supply has an overtemperature condition and that the overvoltage and overcurrent protection circuits have tripped. Bit 4 reports an overtemperature condition of the fan, bit 9 reports that the overvoltage protection circuit has tripped, and bit 10 reports that the overcurrent protection circuit has tripped. To read the register, send `STATus:QUEStionable?`.

Table 4-2. Bit Definitions - Questionable Status Register

Bit		Decimal Value	Definition
0	Voltage	1	The power supply is/was in the constant current mode.
1	Current	2	The power supply is/was in the constant voltage mode.
2-3	Not Used	0	Always set to 0.
4 Overtemperature		16	The fan has a fault condition.
5-8	Not Used	0	Always set to 0.
9	Over Voltage	512	The overvoltage protection circuit has tripped.
10	Over Current	1024	The overcurrent protection circuit has tripped.
11-15	Not Used	0	Always set to 0.

The Questionable Status Event register is cleared when:

- You execute the `*CLS` (clear status) command.
- You query the event register using `STAT:QUES?` (Status Questionable Event register) command.

For example, 16 is returned when you have queried the status of the questionable event register, the temperature condition is questionable.

The Questionable Status Enable register is cleared when:

- You execute `STAT:QUES:ENAB 0` command.

The Standard Event Register

The Standard Event register reports the following types of instrument events: power-on detected, command syntax errors, command execution errors, self-test or calibration errors, query errors, or when an `*OPC` command is executed. Any or all of these conditions can be reported in the standard event summary bit (ESB, bit 5) of Status Byte register through the enable register. To set the enable register mask, you write a decimal value to the register using the `*ESE` (Event Status Enable) command.

> *An error condition (Standard Event register bit 2, 3, 4, or 5) will always record one or more errors in the power supply's error queue. Read the error queue using the* `SYST:ERR?` *command.*

Table 4-3. Bit Definitions – Standard Event Register

Bit		Decimal Value	Definition
0	OPC	1	Operation Complete. All commands prior to and including an *OPC command have been executed.
1	Not Used	0	Always set to 0.
2	QYE	4	Query Error. The power supply tried to read the output buffer but it was empty. Or, new command line was received before a previous query had been read. Or, both the input and output buffers are full.
3	DDE	8	Device Error. A self-test or calibration error occurred (see error numbers 601 through 750 in chapter 5).
4	EXE	16	Execution Error. An execution error occurred (see error numbers -211 through -224 in chapter 5).
5	CME	32	Command Error. A command syntax error occurred (see error numbers -101 through -178 in chapter 5).
6	Not Used	0	Always set to 0.
7	PON	128	Power On. Power has been turned off and on since the last time the event register was read or cleared.

The Standard Event register is cleared when:

- You execute the `*CLS` (clear status) command.
- You query the event register using the `*ESR?` (Event Status register) command.

For example, 28 (4 + 8 + 16) is returned when you have queried the status of the Standard Event register, QYE, DDE, and EXE conditions have occurred.

The Standard Event Enable register is cleared when:

- You execute the `*ESE 0` command.
- You turn on the power and have previously configured the power supply using the `*PSC 1` command.
- The enable register *will not* be cleared at power-on if you have previously configured the power supply using the `*PSC 0` command.

The Status Byte Register

The Status Byte summary register reports conditions from the other status registers. Query data that is waiting in the power supply's output buffer is immediately reported through the "Message Available" bit (bit 4) of Status Byte register. Bits in the summary register are not latched. Clearing an event register will clear the corresponding bits in the Status Byte summary register. Reading all messages in the output buffer, including any pending queries, will clear the message available bit.

Table 4-4. Bit Definitions – Status Byte Summary Register

Bit		Decimal Value	Definition
0-2	Not Used	0	Always set to 0.
3	QUES	8	One or more bits are set in the questionable status register (bits must be "enabled" in the enable register).
4	MAV	16	Data is available in the power supply output buffer.
5	ESB	32	One or more bits are set in the standard event register (bits must be "enabled" in the enable register).
6	RQS	64	The power supply is requesting service (serial poll).
7	Not Used	0	Always set to 0.

The Status Byte Summary register is cleared when:

- You execute the `*CLS` (clear status) command.
- Querying the Standard Event register (`*ESR?` command) will clear only bit 5 in the Status Byte summary register.

For example, 24 (8 + 16) is returned when you have queried the status of the Status Byte register, QUES and MAV conditions have occurred.

The Status Byte Enable register (Request Service) is cleared when:

- You execute the `*SRE 0` command.
- You turn on the power and have previously configured the power supply using the `*PSC 1` command.
- The enable register *will not* be cleared at power-on if you have previously configured the power supply using `*PSC 0`.

Using Service Request (SRQ) and Serial POLL

You must configure your bus controller to respond to the IEEE-488 service request (SRQ) interrupt to use this capability. Use the Status Byte enable register (`*SRE` command) to select which summary bits will set the low-level IEEE-488 service request signal. When bit 6 (request service) is set in the Status Byte, an IEEE-488 service request interrupt message is automatically sent to the bus controller. The bus controller may then poll the instruments on the bus to identify which one requested service (the instrument with bit 6 set in its Status Byte).

The request service bit is cleared only by reading the Status Byte using an IEEE-488 serial poll or by reading the event register whose summary bit is causing the service request.

To read the Status Byte summary register, send the IEEE-488 serial poll message. Querying the summary register will return a decimal value which corresponds to the binary-weighted sum of the bits set in the register. Serial poll will automatically clear the "request service" bit in the Status Byte summary register. No other bits are affected. Performing a serial poll will not affect instrument throughput.

Caution

The IEEE-488 standard does not ensure synchronization between your bus controller program and the instrument. Use the `*OPC?` *command to guarantee that commands previously sent to the instrument have completed. Executing a serial poll before a* `*RST, *CLS,` *or other commands have completed can cause previous conditions to be reported.*

Using *STB? to Read the Status Byte

The `*STB?` (Status Byte query) command is similar to a serial poll but it is processed like any other instrument command. The `*STB?` command returns the same result as a serial poll but the "request service" bit (bit 6) *is not* cleared.

The `*STB?` command is not handled automatically by the IEEE-488 bus interface hardware and will be executed *only* after previous commands have completed. Polling is not possible using the `*STB?` command. Executing the `*STB?` command does not clear the Status Byte summary register.

Using the Message Available Bit (MAV)

You can use the Status Byte "message available" bit (bit 4) to determine when data is available to read into your bus controller. The power supply subsequently clears bit 4 *only* after all messages have been read from the output buffer.

To Interrupt Your Bus Controller Using SRQ

1. Send a device clear message to clear the power supply's output buffer (e.g., `CLEAR 705`).
2. Clear the event registers with the `*CLS` (clear status) command.
3. Set up the enable register masks. Execute the `*ESE` command to set up the Standard Event register and the `*SRE` command for the Status Byte.
4. Send the `*OPC?` (operation complete query) command and enter the result to ensure synchronization.
5. Enable your bus controller's IEEE-488 SRQ interrupt.

To Determine When a Command Sequence is Completed

1. Send a device clear message to clear the power supply's output buffer (e.g., `CLEAR 705`).
2. Clear the event registers with the `*CLS` (clear status) command.
3. Enable the "operation complete" bit (bit 0) in the Standard Event register by executing the `*ESE 1` command.
4. Send the `*OPC?` (operation complete query) command and enter the result to ensure synchronization.
5. Execute your command string to program the desired configuration, and then execute the `*OPC` (operation complete) command as the last command. When the command sequence is completed, the "operation complete" bit (bit 0) is set in the Standard Event register.
6. Use a serial poll to check to see when bit 5 (standard event) is set in the Status Byte summary register. You could also configure the power supply for an SRQ interrupt by sending `*SRE 32` (Status Byte enable register, bit 5).

Using *OPC to Signal When Data is in the Output Buffer

Generally, it is best to use the "operation complete" bit (bit 0) in the Standard Event register to signal when a command sequence is completed. This bit is set in the register after an `*OPC` command has been executed. If you send `*OPC` after a command which loads a message in the power supply's output buffer (query data), you can use the "operation complete" bit to determine when the message is available. However, if too many messages are generated before the `*OPC` command executes (sequentially), the output buffer will fill and the power supply will stop processing commands.

Status Reporting Commands

See diagram "SCPI Status System", on page 101 in this chapter for detailed information of the status register structure of the power supply.

SYSTem:ERRor?

This query command reads one error from the *error queue*. When the front-panel **ERROR** annunciator turns on, one or more command syntax or hardware errors have been detected. A record of up to 20 errors can be stored in the power supply's error queue. *See "Error Messages" for a complete listing of the errors in chapter 5.*

- Errors are retrieved in first-in-first-out(FIFO) order. The first error returned is the first error that was stored. When you have read all errors from the queue, the **ERROR** annunciator turns off. The power supply beeps once each time an error is generated.
- If more than 20 errors have occurred, the last error stored in the queue (the most recent error) is replaced with *-350, "Too many errors"*. No additional errors are stored until you remove errors from the queue. If no errors have occurred when you read the error queue, the power supply responds with *+0, "No error"*.
- The error queue is cleared when power has been off or after a `*CLS` (clear status) command has been executed. The `*RST` (reset) command *does not* clear the error queue.

STATus:QUEStionable:CONDition?

This command queries the Questionable Status condition register to check CV or CC mode of the power supply. The power supply returns a decimal value which corresponds to the binary-weighted sum of all bits in the register. These bits are not latched. If "0" is returned, the power supply is in output off or unregulated state. If "1" is returned, the power supply is in the CC operating mode and if "2" is returned, the power supply is in the CV operating mode. If "3" is returned, the power supply is in failure.

STATus:QUEStionable?

This command queries the Questionable Status event register. The power supply returns a decimal value which corresponds to the binary-weighted sum of all bits in the register. These bits are latched. Reading the event register clears it.

STATus:QUEStionable:ENABle <*enable value*>
This command enables bits in the Questionable Status enable register. The selected bits are then reported to the Status Byte.

STATus:QUEStionable:ENABle?
This command queries the Questionable Status enable register. The power supply returns a binary-weighted decimal representing the bits set in the enable register.

***CLS**
This command clears all event registers and Status Byte register.

***ESE**<*enable value*>
This command enables bits in the Standard Event enable register. The selected bits are then reported to the Status Byte.

***ESE?**
This command queries the Standard Event enable register. The power supply returns a decimal value which corresponds to the binary-weighted sum of all bits in the register.

***ESR?**
This command queries the Standard event register. The power supply returns a decimal value which corresponds to the binary-weighted sum of all bits in the register.

***OPC**
This command sets the "Operation Complete" bit (bit 0) of the Standard Event register after the command is executed.

***OPC?**
This command returns "1" to the output buffer after the command is executed.

***PSC { 0 | 1 }**
(Power-on status clear.) This command clears the Status Byte and the Standard Event register enable masks when power is turned on (`*PSC 1`). When `*PSC 0` is in effect, the Status Byte and Standard Event register enable masks *are not* cleared when power is turned on.

***PSC?**
This command queries the power-on status clear setting. The returned parameter is "0" (`*PSC 0`) or "1" (`*PSC 1`).

***SRE** <*enable value*>
This command enables bits in the Status Byte enable register.

***SRE?**
This command queries the Status Byte Enable register. The power supply returns a decimal value which corresponds to the binary-weighted sum of all bits set in the register.

***STB?**
This command queries the Status Byte summary register. The `*STB?` command is similar to a serial poll but it is processed like any other instrument command. The `*STB?` command returns the same result as a serial poll but the "Request Service" bit (bit 6) *is not* cleared if a serial poll has occurred.

***WAI**
This command instructs the power supply to wait for all pending operations to complete before executing any additional commands over the interface. *Used only in the triggered mode.*

An Introduction to the SCPI Language

SCPI (*Standard Commands for Programmable Instruments*) is an ASCII-based instrument command language designed for test and measurement instruments. Refer to "Simplified Programming Overview", starting on page 78 for an introduction to the basic techniques used to program the power supply over the remote interface.

SCPI commands are based on a hierarchical structure, also known as a *tree system*. In this system, associated commands are grouped together under a common node or root, thus forming *subsystems*. A portion of the `SOURce` subsystem is shown below to illustrate the tree system.

```
[SOURce:]
   CURRent {<current>|MIN|MAX|UP|DOWN}
   CURRent? [MIN|MAX]
   CURRent:
     TRIGgered {<current>|MIN|MAX}
     TRIGgered?{MIN|MAX}
   VOLTage {<voltage>|MIN|MAX|UP|DOWN}
   VOLTage? [MIN|MAX]
   VOLTage:
     TRIGgered {<voltage>|MIN|MAX}
     TRIGgered? {MIN|MAX}
```

`SOURce` is the root keyword of the command, `CURRent` and `VOLTage` are second-level keywords, and `TRIGgered` is third-level keywords. A *colon* (:) separates a command keyword from a lower-level keyword.

Command Format Used in This Manual

The format used to show commands in this manual is shown below:

```
CURRent {<current>|MINimum|MAXimum|UP|DOWN}
```

The command syntax shows most commands (and some parameters) as a mixture of upper- and lower-case letters. The upper-case letters indicate the abbreviated spelling for the command. For shorter program lines, send the abbreviated form. For better program readability, send the long form.

For example, in the above syntax statement, `CURR` and `CURRENT` are both acceptable forms. You can use upper- or lower-case letters. Therefore, `CURRENT`, `curr`, and `Curr` are all acceptable. Other forms, such as `CUR` and `CURREN`, will generate an error.

Braces ({ }) enclose the parameter choices for a given command string. The braces are not sent with the command string.

A *vertical bar* (|) separates multiple parameter choices for a given command string.

Triangle brackets (< >) indicate that you must specify a value for the enclosed parameter. For example, the above syntax statement shows the *current* parameter enclosed in triangle brackets. The brackets are not sent with the command string. You must specify a value for the parameter (such as "`CURR 0.1`").

Some parameters are enclosed in *square brackets* ([ ]). The brackets indicate that the parameter is optional and can be omitted. The brackets are not sent with the command string. If you do not specify a value for an optional parameter, the power supply chooses a default value.

Some portions of commands are enclosed in square brackets([ ]). The brackets indicate that this portion of the command is optional. Most optional portions of the command are not shown in the command description. For the full command showing all the options, see "SCPI Command Summary", starting on page 73.

A *colon* (:) separates a command keyword from a lower-level keyword. You must insert a *blank space* to separate a parameter from a command keyword. If a command requires more than one parameter, you must separate adjacent parameter using a *comma* as shown below:

"`SOURce:CURRent:TRIGgered`"

"`APPLy 3.5,1.5`"

Command Separators

A *colon* (:) is used to separate a command keyword from a lower-level keyword as shown below:

```
"SOURce:CURRent:TRIGgered"
```

A *semicolon* (;) is used to separate two commands within the same subsystem, and can also minimize typing. For example, sending the following command string:

```
"SOUR:VOLT MIN;CURR MAX"
```

... is the same as sending the following two commands:

```
"SOUR:VOLT MIN"
"SOUR:CURR MAX"
```

Use a colon *and* a semicolon to link commands from *different* subsystems. For example, in the following command string, an error is generated if you do not use the colon and semicolon:

```
"DISP:TEXT:CLE;:SOUR:CURR MIN"
```


Using the *MIN* and *MAX* Parameters

You can substitute `MINimum` or `MAXimum` in place of a parameter for many commands. For example, consider the following command:

```
CURRent {<current>|MIN|MAX}
```

Instead of selecting a specific current, you can substitute `MINimum` to set the current to its minimum value or `MAXimum` to set the current to its maximum value.

Querying Parameter Settings

You can query the value of most parameters by adding a *question mark* (?) to the command. For example, the following command sets the output current to 5 amps:

"CURR 5"

You can query the value by executing:

"CURR?"

You can also query the minimum or maximum value allowed with the present function as follows:

"CURR? MAX"
"CURR? MIN"

Caution

If you send two query commands without reading the response from the first, and then attempt to read the second response, you may receive some data from the first response followed by the complete second response. To avoid this, do not send a query command without reading the response. When you cannot avoid this situation, send a device clear before sending the second query command.

SCPI Command Terminators

A command string sent to the power supply *must* terminate with a <*new line*> character. The IEEE-488 EOI (end-or-identify) message is interpreted as a <*new line*> character and can be used to terminate a command string in place of a <*new line*> character. A <*carriage return*> followed by a <*new line*> is also accepted. Command string termination will always reset the current SCPI command path to the root level. The <*new line*> character has the ASCII decimal code of 10.

IEEE-488.2 Common Commands

The IEEE-488.2 standard defines a set of common commands that perform functions like reset, self-test, and status operations. Common commands always begin with an asterisk (*), are four to five characters in length, and may include one or more parameters. The command keyword is separated from the first parameter by a *blank space*. Use a *semicolon* (;) to separate multiple commands as shown below:

"*RST; *CLS; *ESE 32; *OPC?"

SCPI Parameter Types

The SCPI language defines several different data formats to be used in program messages and response messages.

Numeric Parameters Commands that require numeric parameters will accept all commonly used decimal representations of numbers including optional signs, decimal points, and scientific notation. Special values for numeric parameters like `MINimum`, `MAXimum`, and `DEFault` are also accepted. You can also send engineering unit suffixes (V, A or SEC) with numeric parameters. If only specific numeric values are accepted, the power supply will automatically round the input numeric parameters. The following command uses a numeric parameter:

```
CURR {<current>|MIN|MAX|UP|DOWN}
```

Discrete Parameters Discrete parameters are used to program settings that have a limited number of values (like `BUS`, `IMM`). Query responses will *always* return the short form in all upper-case letters. The following command uses discrete parameters:

```
TRIG:SOUR {BUS|IMM}
```

Boolean Parameters Boolean parameters represent a single binary condition that is either true or false. For a false condition, the power supply will accept "OFF" or " 0 ". For a true condition, the power supply will accept "ON" or " 1 ". When you query a boolean setting, the power supply will *always* return " 0 " or " 1 ". The following command uses a boolean parameter:

```
DISP {OFF|ON}
```

String Parameters String parameters can contain virtually any set of ASCII characters. A string *must* begin and end with matching quotes; either with a single quote or with a double quote. You can include the quote delimiter as part of the string by typing it twice without any characters in between. The following command uses a string parameter:

```
DISP:TEXT <quoted string>
```

Halting an Output in Progress

You can send a *device clear* at any time to stop an output in progress over the GPIB interface. The status registers, the error queue, and all configuration states are left unchanged when a device clear message is received. Device clear performs the following actions.

- The power supply's input and output buffers are cleared.
- The power supply is prepared to accept a new command string.
- The following statement shows how to send a device clear over the GPIB interface using *Agilent Technologies BASIC*.

```
CLEAR 705          IEEE-488 Device Clear
```

- The following statement shows how to send a device clear over the GPIB interface using the GPIB Command Library for *C or QuickBASIC*.

```
IOCLEAR (705)
```

For RS-232 operation, sending the <Ctrl-C> character will perform the same operation as the IEEE-488 device clear message. The power supply's DTR (data terminal ready) handshake line is set true following a device clear message. See "DTR/DSR Handshake Protocol", on page 64 in chapter 3 for further details.

Note *All remote interface configurations can be entered only from the front panel. See "Remote Interface Configuration" in chapter 3 to configure for GPIB or RS-232 interface before operating the power supply remotely.*

SCPI Conformance Information

The Agilent E3632A Power Supply conform to the '1995.0' version of the SCPI standard. Many of the commands required by the standard are accepted by the power supply but are not described in this manual for simplicity or clarity. Most of these non-documented commands duplicate the functionality of a command already described in this manual.

SCPI Confirmed Commands

The following table lists the SCPI-confirmed commands that are used by the power supply.

```
DISPlay
  [:WINDow][:STATe] {OFF|ON}
  [:WINDow][:STATe]?
  [:WINDow]:TEXT[:DATA] <quoted string>
  [:WINDow]:TEXT[:DATA]?
  [:WINDow]:TEXT:CLEar

INITiate[:IMMediate]

MEASure
  :CURRent[:DC]?
  [:VOLTage][:DC]?

OUTPut
  [:STATe] {OFF|ON}
  [:STATE]?

[SOURce]
  :CURRent[:LEVel][:IMMediate][:AMPLitude] {<current>|MIN|MAX|UP|DOWN}
  :CURRent[:LEVel][:IMMediate][:AMPLitude]? [MIN|MAX]
  :CURRent[:LEVel][:IMMediate]:STEP[:INCRement] {<numeric value>|DEFault}
  :CURRent[:LEVel][:IMMediate]:STEP[:INCRement]? {DEFault}
  :CURRent[:LEVel]:TRIGgered[:AMPLitude] {<current>|MIN|MAX}
  :CURRent[:LEVel]:TRIGgered[:AMPLitude]?[MIN|MAX]
  :CURRent:PROTection[:LEVel] {<current>|MIN|MAX}
  :CURRent:PROTection[:LEVel]? {MIN|MAX}
  :CURRent:PROTection:STATe {0|1|OFF|ON}
  :CURRent:PROTection:STATe?
  :CURRent:PROTection:TRIPped?
  :CURRent:PROTection:CLEar
```

SCPI Confirmed Commands *(continued)*

```
[SOURce]
   :VOLTage[:LEVel][:IMMediate][:AMPLitude] {<voltage>|MIN|MAX|UP|DOWN}
   :VOLTage[:LEVel][:IMMediate][:AMPLitude]?[MIN|MAX]
   :VOLTage[:LEVel][:IMMediate]:STEP[:INCRement] {<numeric value>|DEFault}
   :VOLTage[:LEVel][:IMMediate]:STEP[:INCRement]? {DEFault}
   :VOLTage[:LEVel]:TRIGgered[:AMPLitude] {<voltage>|MIN|MAX}
   :VOLTage[:LEVel]:TRIGgered[:AMPLitude]?[MIN|MAX]
   :VOLTage:PROTection[:LEVel] {<voltage>|MIN|MAX}
   :VOLTage:PROTection[:LEVel]? {MIN|MAX}
   :VOLTage:PROTection:STATe {0|1|OFF|ON}
   :VOLTage:PROTection:STATe?
   :VOLTage:PROTection:TRIPped?
   :VOLTage:PROTection:CLEar
   :VOLTage:RANGe {P15V|P30V|LOW|HIGH}
   :VOLTage:RANGe?

STATus
   :QUEStionable:CONDition?
   :QUEStionable[:EVENt]?
   :QUEStionable:ENABle <enable value>
   :QUEStionable:ENABle?


SYSTem
   :BEEPer[:IMMediate]
   :ERRor?
   :VERSion


TRIGger
   [:SEQuence]:DELay {<seconds>|MIN|MAX}
   [:SEQuence]:DELay?
   [:SEQuence]:SOURce{BUS|IMM}
   [:SEQuence]:SOURce?
```

Device Specific Commands

The following commands are device-specific to the Agilent E3632A power supply. They are not included in the '1995.0' version of the SCPI standard. However, these commands are designed with the SCPI standard in mind and they follow all of the command syntax rules defined by the standard.

Non-SCPI Commands

```
APPLy {<voltage>|DEF|MIN|MAX>}[,{<current>|DEF|MIN|MAX}]
APPLy?


CALibration
    :COUNt?
    :CURRent[:DATA] <numeric value>
    :CURRent:LEVel {MIN|MID|MAX}
    :CURRent:PROTection
    :DAC:ERRor
    :SECure:CODE <new code>
    :SECure:STATe {OFF|ON},<code>
    :SECure:STATe?
    :STRing <quoted string>
    :STRing?
    :VOLTage[:DATA] <numeric value>
    :VOLTage:LEVel {MIN|MID|MAX}
    :VOLTage:PROTection


OUTPut
    :RELay[:STATe] {OFF|ON}
    :RELay[:STATE]?


SYSTem
    :LOCal
    :REMote
    :RWLock
```

IEEE-488 Conformance Information

Dedicated Hardware Lines

ATN	*Attention*
IFC	*Interface Clear*
REN	*Remote Enable*
SRQ	*Service Request Enable*

Addressed Commands

DCL	*Device Clear*
EOI	*End or Identify*
GET	*Group Execute Trigger*
GTL	*Go To Local*
LLO	*Local Lockout*
SDC	*Selected Device Clear*
SPD	*Serial Poll Disable*
SPE	*Serial Poll Enable*

IEEE-488 Common Commands

```
*CLS
*ESE <enable value>
*ESE?
*ESR?
*IDN?
*OPC
*OPC?
*PSC {0|1}
*PSC?
*RST
*SAV {1|2|3}
*RCL {1|2|3}
*SRE <enable value>
*SRE?
*STB?
*TRG
*TST?
*WAI
```

5

Error Messages

Error Messages

When the front-panel **ERROR** annunciator turns on, one or more command syntax or hardware errors have been detected. A record of up to 20 erros is stored in the power supply's error queue. The power supply beeps once each time an error is generated.

- Errors are retrieved in first-in-first-out (FIFO) order. The first error returned is the first error that was stored. When you have read all errors from the queue, the **ERROR** annunciator turns off.
- If more than 20 errors have occurred, the last error stored in the queue (the most recent error) is replaced with -350, "*Too many errors*". No additional errors are stored until you remove errors from the queue. If no erros have occurred when you read the error queue, the supply responds with *+0, "No error*" over the remote interface or "NO ERRORS" from the front panel.
- The error queue is cleared when power has been off or after a `*CLS`(clear status) command has been executed. The `*RST` (reset command) command *does not* clear the error queue.
- *Front-panel operation:*

  If the **ERROR** annunciator is on, press the `Error` key repeatedly to read the errors stored in the queue. The error queue is cleared when you read all errors.

  error -113

- *Remote interface operation:*

  `SYSTem:ERRor?` *Reads one error from the error queue*

  Errors have the following format (the error string may contain up to 80 *characters*).

  ```
  -113, "Undefined header"
  ```

Execution Errors

-101 **Invalid character**

An invalid character was found in the command string. You may have inserted a character such as #, $, or % in the command keyword or within a parameter.

Example: `OUTP:STAT #ON`

-102 **Syntax error**

Invalid syntax was found in the command string. You may have inserted a blank space before or after a colon in the command header, or before a comma.

Example: `VOLT:LEV  ,1`

-103 **Invalid separator**

An invalid separator was found in the command string. You may have used a comma instead of a colon, semicolon, or blank space - or you may have used a blank space instead of a comma.

Example: `TRIG:SOUR,BUS` or `APPL 1.0 1.0`

-104 **Data type error**

The wrong parameter type was found in the command string. You may have specified a number where a string was expected, or vice versa.

-105 **GET not allowed**

A Group Execute Trigger (GET) is not allowed within a command string.

-108 **Parameter not allowed**

More parameters were received than expected for the command. You may have entered an extra parameter, or you added a parameter to a command that does not accept a parameter.

Example: `APPL? 10`

-109 **Missing parameter**

Fewer parameters were received than expected for the command. You omitted one or more parameters that are required for this command.

Example: `APPL`

-112 **Program mnemonic too long**

A command header was received which contained more than the maximum 12 characters allowed.

-113 **Undefined header**

A command was received that is not valid for this power supply. You may have misspelled the command or it may not be a valid command. If you are using the short form of the command, remember that it may contain up to four letters.

Example: `TRIGG:DEL 3`

-121 **Invalid character in number**

An invalid character was found in the number specified for a parameter value.

Example: `*ESE #B01010102`

-123 **Numeric overflow**

A numeric parameter was found whose exponent was larger than 32,000.

-124 **Too many digits**

A numeric parameter was found whose mantissa contained more than 255 digits, excluding leading zeros.

-128 **Numeric data not allowed**

A numeric parameter was received but a character string was expected.

Example: `DISP:TEXT 123`

-131 **Invalid suffix**

A suffix was incorrectly specified for a numeric parameter. You may have misspelled the suffix.

Example: `TRIG:DEL 0.5 SECS`

-134 **Suffix too long**

A suffix for a numeric parameter contained too many characters.

-138 **Suffix not allowed**

A suffix was received following a numeric parameter which does not accept a suffix.

Example: `STAT:QUES:ENAB 18 SEC` (SEC is not a valid suffix).

-141 **Invalid character data**

Either the character data element contained an invalid character or the particular element received was not valid for the header.

-144 **Character data too long**

The character data element contained too many characters.

-148 **Character data not allowed**

A discrete parameter was received but a character string or a numeric parameter was expected. Check the list of parameters to verify that you have used a valid parameter type.

Example: `DISP:TEXT ON`

-151 **Invalid string data**

An invalid character string was received. Check to see if you have enclosed the character string in single or double quotes.

Example: `DISP:TEXT 'ON`

-158 **String data not allowed**

A character string was received but is not allowed for the command. Check the list of parameters to verify that you have used a valid parameter type.

Example: `TRIG:DEL 'zero'`

-160 to -168 **Block data errors**

The power supply does not accept block data.

-170 to -178 **Expression errors**

The power supply does not accept mathematical expressions.

-211 **Trigger ignored**

A Group Execute Trigger (GET) or `*TRG` was received but the trigger was ignored. Make sure that the trigger source should be selected to the bus and the trigger subsystem should be initiated by `INIT[:IMM]` command.

-213 **Init ignored**

An `INITiate` command was received but could not be executed because a measurement was already in progress. Send a device clear to halt a measurement in progress and place the power supply in the "idle" state.

-221 **Settings conflict**

Indicates that a legal program data element was parsed but could not be executed due to the current device state.

-222 **Data out of range**

A numeric parameter value is outside the valid range for the command.

Example: `TRIG:DEL -3`

-223 **Too much data**

A character string was received but could not be executed because the string length was more than 40 characters. This error can be generated by the `CALibration:STRing` command.

-224 **Illegal parameter value**

A discrete parameter was received which was not a valid choice for the command. You may have used an invalid parameter choice.

Example: `DISP:STAT XYZ` (**`XYZ`** is not a valid choice).

-330 **Self-test failed**

The power supply's complete self-test failed from the remote interface (`*TST?` command). In addition to this error, more specific self-test errors are also reported. *See also "Self-Test Errors", starting on page 128.*

-350 **Too many errors**

The error queue is full because more than 20 errors have occurred. No additional errors are stored until you remove errors from the queue. The error queue is cleared when power has been off, or after a `*CLS` (clear status) command has been executed.

-410 **Query INTERRUPTED**

A command was received which sends data to the output buffer, but the output buffer contained data from a previous command (the previous data is not overwritten). The output buffer is cleared when power has been off, or after a `*RST` (reset) command has been executed.

-420 **Query UNTERMINATED**

The power supply was addressed to talk (i.e., to send data over the interface) but a command has not been received which sends data to the output buffer. For example, you may have executed an `APPLy` command (which does not generate data) and then attempted an `ENTER` statement to read data from the remote interface.

-430 **Query DEADLOCKED**

A command was received which generates too much data to fit in the output buffer and the input buffer is also full. Command execution continues but all data is lost.

-440 **Query UNTERMINATED after indefinite response**

The `*IDN?` command must be the last query command within a command string.

Example: `*IDN?;:SYST:VERS?`

501 **Isolator UART framing error**

502 **Isolator UART overrun error**

511 **RS-232 framing error**

512 **RS-232 overrun error**

513 **RS-232 parity error**

514 **Command allowed only with RS-232**

There are three commands which are only allowed with the RS-232 interface: `SYSTem:LOCal`, `SYSTem:REMote`, and `SYSTem:RWLock`.

521 **Input buffer overflow**

522 **Output buffer overflow**

550 **Command not allowed in local**

You should always execute the `SYSTem:REMote` command before sending other commands over the RS-232 interface.

Self-Test Errors

The following errors indicate failures that may occur during a self-test. Refer to the *Service Guide* for more information.

601 **Front panel does not respond**

602 **RAM read/write failed**

603 **A/D sync stuck**

604 **A/D slope convergence failed**

605 **Cannot calibrate rundown gain**

606 **Rundown gain out of range**

607 **Rundown too noisy**

608 **Serial configuration readback failed**

624 **Unable to sense line frequency**

625 **I/O processor does not respond**

626 **I/O processor failed self-test**

630 **Fan test failed**

631 **System DAC test failed**

632 **Hardware test failed**

Calibration Errors

The following errors indicate failures that may occur during a calibration. Refer to the *Service Guide* for more information.

701 **Cal security disabled by jumper**

The calibration security feature has been disabled with a jumper inside the power supply. When applicable, this error will occur at power-on to warn you that the power supply is unsecured.

702 **Cal secured**

The power supply is secured against calibration.

703 **Invalid secure code**

An invalid calibration security code was received when attempting to unsecure or secure the power supply. You must use the same security code to unsecure the power supply as was used to secure it, and vice versa. The security code may contain up to 12 alphanumeric characters. The first character must be a letter.

704 **Secure code too long**

A security code was received which contained more than 12 characters.

705 **Cal aborted**

A calibration in progress is aborted when you press any front-panel key, send a device clear, or change the local/remote state of the instrument.

708 **Cal output disabled**

Calibration is aborted by sending `OUTP OFF` command during calibrating a output.

712 **Bad DAC cal data**

The specified DAC calibration values (`CAL:VOLT` or `CAL:CURR`) are out of range. Note that the new calibration constants are not stored in the non-volatile memory.

713 **Bad readback cal data**

The specified readback calibration values (`CAL:VOLT` or `CAL:CURR`) are out of range. Note that the new calibration constants are not stored in the non-volatile memory.

714 **Bad OVP cal data**
The overvoltage protection calibration constant is out of range. Note that the new calibration constants are not stored in the non-volatile memory.

715 **Bad OCP cal data**
The overcurrent protection calibration constant is out of range. Note that the new calibration constants are not stored in the non-volatile memory.

716 **Bad DAC DNL error correction data**
Invalid data measured during the calibration for DAC differential nonlinearity error correction.

717 **Cal OVP or OCP status enabled**
Overvoltage protection status or overcurrent protection status is enabled. You must set both overvoltage and overcurrent protection status to OFF before and during the calibration.

740 **Cal checksum failed, secure state**

741 **Cal checksum failed, string data**

742 **Cal checksum failed, store/recall data in location 0**

743 **Cal checksum failed, store/recall data in location 1**

744 **Cal checksum failed, store/recall data in location 2**

745 **Cal checksum failed, store/recall data in location 3**

746 **Cal checksum failed, DAC cal constants**

747 **Cal checksum failed, readback cal constants**

748 **Cal checksum failed, GPIB address**

749 **Cal checksum failed, internal data**

750 **Cal checksum failed, DAC DNL error correction data**

6

Application Programs

Application Programs

This chapter contains two application programs over the remote interface to help you develop programs for your own application. Chapter 4, "Remote Interface Reference," starting on page 71, lists the syntax for the SCPI (Standard Commands for Programmable Instruments) commands available to program the power supply.

All program examples have been tested on a PC with Windows 3.1 or Windows for Workgroups. Both examples are for use with GPIB (IEEE 488). These examples require a VISA (Virtual Instrument Software Architecture) driver with your GPIB PC card. You should have the "visa.dll" in your windows/system directory for the GPIB examples to work. All program examples perform the same task. They step through voltages and make corresponding current readings to characterize a power diode.

C++ Example for GPIB(IEEE 488)

This following C programming example shows sending and receiving formatted I/O. Also see your VISA user's guide for non-formatted I/O. This example program is intended to show the use of SCPI commands and VISA functionality and does not include error trapping. Error trapping, however, is good programming practice and is recommended in your application. See your VISA user's guide for more information about error trapping.

The example program was written in Microsoft Visual C++ ver 1.52, project type "QuickWin application", using the large memory model. *Be sure to move the "visa.lib and "visa.h" file to the lib and include development directory. These are usually found at c:\vxipnp\win\lib\msc\ and c:\vxipnp\win\include.*

Diode.c

```
/*Diode.C
This example program steps the E3632A DC Power Supply through 10 voltages and measures the
current response. It prints the voltage step and the current response as a table. Note that
the GPIB address is the default address from the factory for the E3632A.*/

#include <visa.h>
#include <stdio.h>
#include <string.h>
#include <time.h>

/* Provides a delay of the specified time wait in milliseconds*/
void delay( clock_t wait );

void main ()
{
  ViSession defaultRM;     /* resource manager id                    */
  ViSession power_supply;  /* session id to an instrument            */
  char reply_string [256]; /* string returned from instrument        */
  char GPIB_address [3];   /* GPIB address of instrument             */
  char Visa_address[40];   /* Complete VISA address send to card     */
  double voltage;          /* value of voltage sent to power supply  */
  double current;          /* value of current output of power supply */

  /* build the address needed to open communication with GPIB card */
  /* address format looks like this; GPIB0::5::INSTR */
  /*                                                                */

  strcpy(GPIB_address, "5"); /******  Change GPIB address here *****/
  strcpy(Visa_address, "GPIB0::");
  strcat(Visa_address, GPIB_address);
```

...continued

```
/* Open communication (session) with power supply */
viOpenDefaultRM (&defaultRM);
viOpen (defaultRM, Visa_address, 0,0, &power_supply);

/* Query the power supply id, read response and print */
viPrintf (power_supply, "*IDN?\n");
viScanf (power_supply, "%s", &reply_string);
printf ("Instrument identification string:\n      %s\n\n", reply_string);

/* Initialize Power Supply */
viPrintf (power_supply, "*RST\n");       /* Set power on condition      */
viPrintf (power_supply, "Current 2\n");  /* Set Current limit to 2A     */
viPrintf (power_supply, "Output on\n");  /* Turn output on              */

printf("Voltage  Current\n\n");          /* Print heading               */

/* Step from 0.6v to 0.8 volt in .02volt steps */
for(voltage =.6;voltage <<=.8001;voltage +=.02)
  {
  viPrintf (power_supply, "Volt %f\n",voltage);     /*set voltage                */
  printf("%.3f",voltage);                           /* print power supply setting */
  delay(500);                              /* allow output to settle for 500 msec */
  viPrintf(power_supply,"Measure:Current?\n");      /*measure output current       */
  viScanf (power_supply, "%lf",&current);           /* retrieve reading            */
  printf("     %.3lf\n",current);                   /* print reading               */
  }

viPrintf (power_supply, "Output Off\n");            /* turn off  output            */

/* Close communication session */
viClose (power_supply);
viClose (defaultRM);
}

/* Pauses for a specified number of milliseconds. */
void delay( clock_t wait )
{
   clock_t goal;
   clock_t delay;
   wait = wait/1000;
   delay = (clock_t)wait * CLOCKS_PER_SEC;
   goal = delay + clock();
   while( goal > clock() );
}
```

End of Program

Excel 5.0 Example for Windows 3.1 and GPIB

Excel VB Macros may be used to control your Agilent E3632A. With Excel you can take the value of a cell in a spread sheet, send it to the power supply, and then record the response on the worksheet. The example on the following pages characterizes a component across the Agilent E3632A terminals. This example reads 11 voltages from a worksheet, programs the Agilent E3632A to that voltage, and then reads the current. The value of current is recorded next to the voltage on the spread sheet. The example is for Excel 5.0 in Windows 3.1.

To write macros and control the power supply in Excel first open a module in Excel. From the "Insert" menu choose "Macro" and then "Module". Name the module created this way "Diode bas" (click the right mouse button on the tab). Create one more module named "GPIB bas". The module "GPIB bas" will set up all the overhead needed to talk to the GPIB port. This module will subroutines that allow the communication in a simple form. The macro called "Diode" is an example that tests a diode using the other module.

To try the example for characterizing a diode, type in both modules. Once the modules are completed, go to a worksheet. In cell A4 type "Volts", in cell B4 type "Current". In cells A5 type 0.6. Fill in the cells A4 to A15 in 0.02 increments so that cell A15 contains 0.8.

Now while the cursor is still in the worksheet, select "Tools, Macro" from the menu. Double click on the Diode macro in the Macro dialog box. The power supply will reset to power on condition and then step through the voltages in the worksheet. After each step the current is measured, and recorded in the worksheet.

Make any changes to suit your needs in the "Diode bas" module. Change the GPIB address in the routine "OpenPort( )" contained in the "GPIB bas" module. If there is a system error when trying to run the macro, you may have to reboot the PC for the GPIB port to work.

Diode bas Macro

```
Option Explicit
'''''''''''''''''''''''''''''''''''''''''''''''''''''''''''''''''''''''''''''''''''
' This is the subroutine first executed. Modify this routine
' to suit your needs. To change the GPIB address, go to the module GPIB,
' Sub OpenPort(), and change the variable VISAaddr = "5" to the
' required GPIB address
'''''''''''''''''''''''''''''''''''''''''''''''''''''''''''''''''''''''''''''''''''
Sub Diode()
     Range("B5:B15").ClearContents
     Dim I As Integer
     OpenPort
     SendSCPI "*RST"               'Reset E3632A to power on condition
     SendSCPI "Output ON"          'Turn on the output
     For I = 5 To 15
         ' Convert the worksheet value to a string, add to SCPI command
         SendSCPI "Volt" & Str$(Cells(I, 1))
         ' Request a current measurement, put response in worksheet
         Cells(I, 2) = Val(SendSCPI("meas:current?"))
     Next I
     SendSCPI "Output OFF"        'Turn off the output
     ClosePort
End Sub
```

GPIB bas Macro

```
Option Explicit
' - Declarations for VISA.DLL, additional declarations are usually in the
' directory c:\vxipnp\win\include in file visa.bas, also see the VISA manual
Declare Function viOpenDefaultRM Lib "VISA.DLL" Alias "#141" (sesn As Long) As Long
Declare Function viOpen Lib "VISA.DLL" Alias "#131" (ByVal sesn As Long, _
   ByVal desc As String, ByVal mode As Long, ByVal TimeOut As Long, vi As Long) As Long
Declare Function viClose Lib "VISA.DLL" Alias "#132" (ByVal vi As Long) As Long
Declare Function viRead Lib "VISA.DLL" Alias "#256" (ByVal vi As Long, _
   ByVal Buffer As String, ByVal Count As Long, retCount As Long) As Long
Declare Function viWrite Lib "VISA.DLL" Alias "#257" (ByVal vi As Long, _
   ByVal Buffer As String, ByVal Count As Long, retCount As Long) As Long

' Error Codes and other global variables
Global Const VI_SUCCESS = &h0&
Global videfaultRM As Long        ' resource manager id for VISA GPIB
Global vi As Long                 ' stores the session for VISA
Dim errorStatus As Long           ' VTL error code
''''''''''''''''''''''''''''''''''''''''''''''''''''''''''''''''''''''''''''''''
' This routine requires the file VISA.dll. It typically resides under
' the directory c:\windows\system. This routine uses the VTL Library to
' send commands to an instrument. A description of these and additional
' VTL commands are contained in the Hewlett Packard Visa Transition
' Library book Agilent PN E2094-90002.
''''''''''''''''''''''''''''''''''''''''''''''''''''''''''''''''''''''''''''''''
Function SendSCPI(SCPICmd As String) As String
' This function will send a SCPI command string to the
' GPIB port. If the command contains a question mark,
' the response is read, and returned.

    Dim readbuf As String * 512   ' buffer used for returned string
    Dim crlfpos As Integer        ' location of CR's and LF's in readbuf
    Dim cmdString As String       ' command passed to instrument
    Dim ReturnString As String    ' string returned from instrument
    Dim actual As Long            ' number of characters send/returned

    'Set up an error handler within this subroutine that will get
    'called if an error occurs.
    On Error GoTo VIerrorHandler
    'Write the command to the instrument terminated by a linefeed.
    cmdstring = SCPICmd & Chr$(10)
    errorStatus = viWrite(vi, ByVal commandstr, Len(commandstr), actual)
```

...continued

```
    If InStr(SCPICmd, "?") Then           'If a query read the response string
        errorStatus = viRead(vi, ByVal readbuf, 512, actual)
        ReturnString = readbuf
        'Strip out any nul's from the response string.
        crlfpos = InStr(ReturnString, Chr$(0))
        If crlfpos Then
            ReturnString = Left(ReturnString, crlfpos - 1)
        End If
        SendSCPI = ReturnString           'return the remaining string
    End If                                ' end of query to instrument for a response
Exit Function

VIerrorHandler:
'Display the error message in the txtResponse TextBox
MsgBox " I/O Error: " & Error$()
'Close the device session
errorStatus = viClose(vi)
Exit Function
End Function

Sub OpenPort()
    Dim VISAaddr As String
    '****************************
    'Change the GPIB address here
    '****************************
    VISAaddr = "5"
    errorStatus = viOpenDefaultRM(videfaultRM)   'open the visa session
    'Open communication to instrument
    errorStatus = viOpen(videfaultRM, "GPIB0::" & VISAaddr & "::INSTR",0, 1000, vi)
    If errorStatus < VI_SUCCESS Then             ' on error give message
       Cells(1, 1) = "Unable to Open port"
    End If
End Sub

Sub ClosePort()
    errorStatus = viClose(vi)
   'close the session
    errorStatus = viClose(videfaultRM)
End Sub
```

End of Program

7

Tutorial

Tutorial

The Agilent E3632A is a high performance instruments capable of delivering clean dc power. But to take full advantage of the performance characteristics designed into the power supply, certain basic precautions must be observed when connecting it for use on the lab bench or as a controlled power supply. This chapter describes basic operation of linear power supplies and gives specific details on the operation and use of the Agilent E3632A DC power supply:

- Overview of Agilent E3632A Operation, page 141
- Output Characteristics, page 143
- Connecting the Load, page 147
- Extending the Voltage and Current Range, page 151
- Remote Programming, page 152
- Remote Programming, page 152

Overview of Agilent E3632A Operation

Series regulated power supplies were introduced many years ago and are still used extensively today. The basic design technique, which has not changed over the years, consists of placing a control element in series with the rectifier and load device. Figure 7-1 shows a simplified schematic of a series regulated supply with the series element depicted as a variable resistor. Feedback control circuits continuously monitor the output and adjust the series resistance to maintain a constant output voltage. Because the variable resistance of Figure 7-1 is actually one or more power transistor operating in the linear (class A) mode, supplies with this type of regulator are often called *linear* power supplies. Linear power supplies have many advantages and usually provide the simplest most effective means of satisfying high performance and low power requirements.

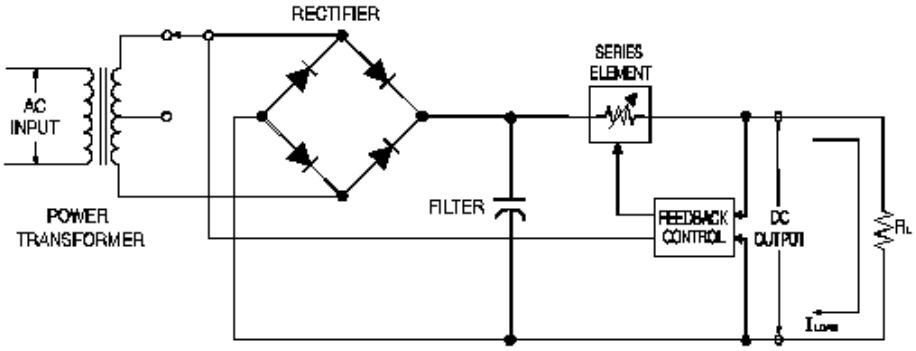

Figure 7-1. Diagram of Simple Series Power Supply with Tap Selection

To keep the voltage across the series resistance low, some supplies use preregulation before the rectifier bridge. Figure 7-1 shows a controlled transformer tap as used in the Agilent E3632A. This is one of several techniques using semiconductors for preregulation to reduce the power dissipated across the series element.

In terms of performance, a linear regulated supply has a very precise regulating properties and responds quickly to variations of the line and load. Hence, its line and load regulation and transient recovery time are superior to supplies using other regulation techniques. The power supply also exhibits low ripple and noise, is tolerant of ambient temperature changes, and with its circuit simplicity, has a high reliability.

The Agilent E3632A contains a linear regulated power supply. It is controlled by a control circuit that provides voltages to program the outputs. The power supply sends back to the control circuits a voltage representing the output at the terminals. The control circuits receive information from the front panel and send information to the display. Similarly the control circuits "talk" to the remote interface for input and output with the GPIB and RS-232 interfaces. The remote interface is at earth ground and optically isolated from the control circuit and the power supply.

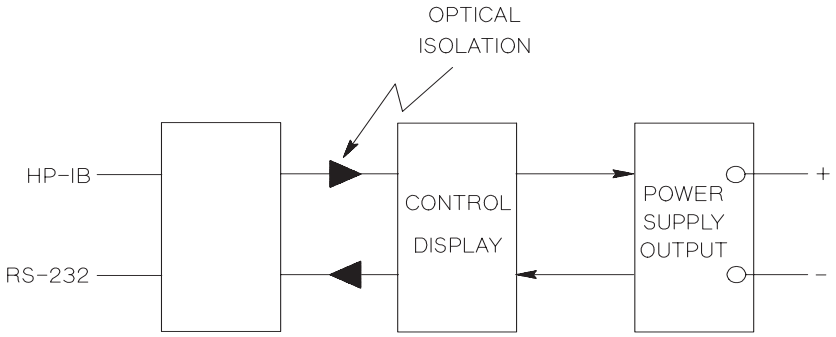

Figure 7-2. Block Diagram of the Power Supply Showing the Optical Isolation

Output Characteristics

An ideal constant-voltage power supply would have a zero output impedance at all frequencies. Thus, as shown in Figure 7-3, the voltage would remain perfectly constant in spite of any changes in output current demanded by the load.

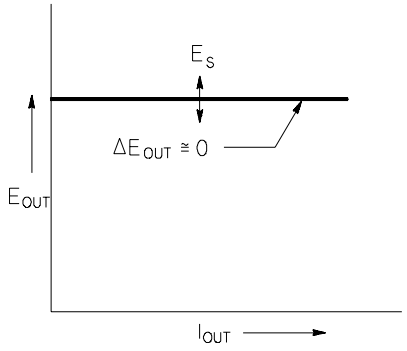

Figure 7-3. Ideal Constant Voltage Power Supply

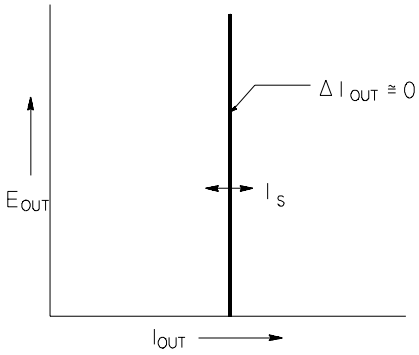

Figure 7-4. Ideal Constant Current Power Supply

The ideal constant-current power supply exhibits an infinite output impedance at all frequencies. Thus as Figure 7-4 indicates, the ideal constant-current power supply would accommodate a load resistance change by altering its output voltage by just the amount necessary to maintain its output current at a constant value.

The output of the E3632A power supply can operate in either constant-voltage (CV) mode or constant-current (CC) mode. Under certain fault conditions, the power supply can not operate in either CV or CC mode and becomes unregulated.

Figure 7-5 shows the operating modes of the output of the Agilent E3632A power supply. The operating point of one supply will be either above or below the line $R_L = R_C$. This line represents a load where the output voltage and the output current are equal to the voltage and current setting. When the load R_L is greater than R_C, the output voltage will dominate since the current will be less then the current setting. The power supply is said to be in constant voltage mode. The load at point 1 has a relatively high resistance value (compared to R_C), the output voltage is at the voltage setting, and the output current is less than the current setting. In this case the power supply is in the constant voltage mode and the current setting acts as a current limit.

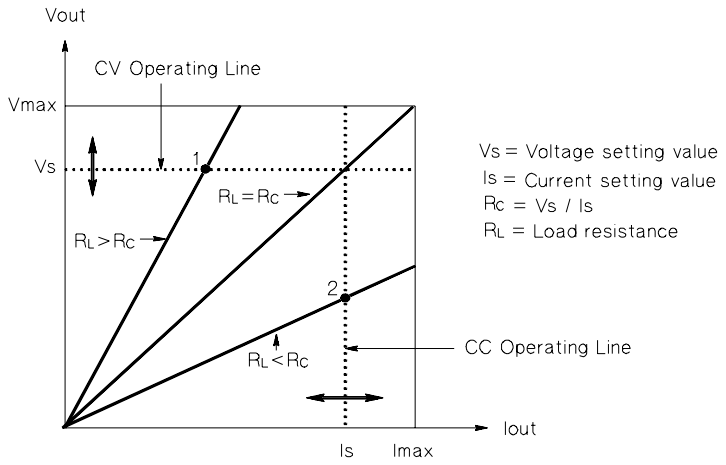

Figure 7-5. Output Characteristics

When the load R_L is less than R_C, the output current will dominate since the voltage will be less than the set voltage. The power supply is said to be in constant current mode. The load at point 2 has a relatively low resistance, the output voltage is less than the voltage setting, the output current is at the current setting. The supply is in constant current mode and the voltage setting acts as a voltage limit.

Unregulated State

If the power supply should go into a mode of operation that is neither CV or CC, the power supply is *unregulated*. In this mode the output is not predictable. The unregulated condition may be the result of the ac line voltage below the specifications. The unregulated condition may occur momentarily. For example when the output is programmed for a large voltage step; the output capacitor or a large capacitive load will charge up at the current limit setting. During the ramp up of the output voltage the power supply will be in the unregulated mode. During the transition from CV to CC as when the output is shorted, the unregulated state may occur briefly during the transition.

Unwanted Signals

An ideal power supply has a perfect dc output with no signals across the terminals or from the terminals to earth ground. The actual power supply has finite noise across the output terminals, and a finite current will flow through any impedance connected from either terminal to earth ground. The first is called *normal mode voltage noise* and the second *common mode current noise*.

Normal mode voltage noise is in the form of ripple related to the line frequency plus some random noise. Both of these are of very low value in the Agilent E3632A. Careful lead layout and keeping the power supply circuitry away from power devices and other noise sources will keep these values low.

Common mode noise can be a problem for very sensitive circuitry that is referenced to earth ground. When a circuit is referenced to earth ground, a low level line—related ac current will flow from the output terminals to earth ground. Any impedance to earth ground will create a voltage drop equal to the current flow multiplied by the impedance. To minimize this effect, the output terminal can be grounded at the output terminal. Alternately, any impedances to earth ground should have a complementary impedance to earth ground to cancel any generated voltages. If the circuit is not referenced to earth ground, common mode power line noise is typically not a problem.

The output will also change due to changes in the load. As the load increases the output current will cause a small drop in the output voltage of the power supply due to the output impedance R. Any resistance in the connecting wire will add to this resistance and increase the voltage drop. Using the largest possible hook up wire will minimize the voltage drop. Using the remote sense leads at the load will compensate for lead resistance in the load leads.

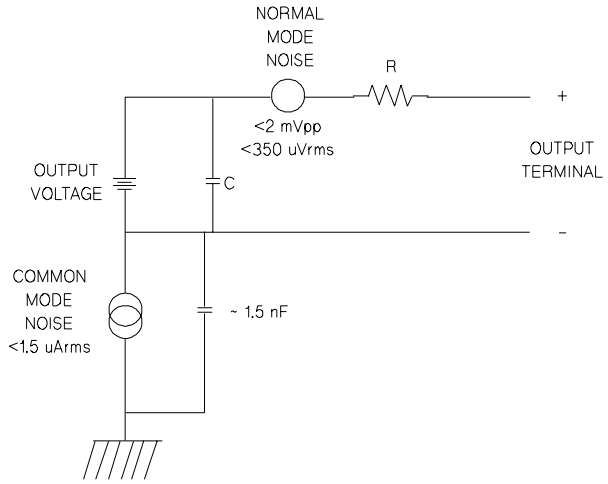

Figure 7-6. Simplified Diagram of Common Mode and Normal Mode Sources of Noise

When the load changes very rapidly, as when a relay contact is closed, the inductance in the hook up wire and in the power supply output will cause a spike to appear at the load. The spike is a function of the rate of change of the load current. When very rapid changes in load are expected, a capacitor with a low series resistance, in parallel with the power supply, and close to the load is the best way to minimize these voltage spikes.

Connecting the Load

Output Isolation

The output of the power supply is isolated from chassis ground. Any output terminal may be grounded, or an external voltage source may be connected between any terminal output and ground. However, output terminals must be kept within ±60 Vdc when metal shorting bars without insulation are used to connect the (+) output to the (+) sense and the (-) output and the (-) sense terminals or ±240 Vdc of ground when metal shorting bars without insulation are either replaced with insulated conductors or they are removed from the terminals so there is no operator access to the output conductors without insulation. A chassis ground terminal is provided on the front panel for convenience.

Multiple Loads

When connecting multiple loads to the power supply, each load should be connected to the output terminals using separate connecting wires. This minimizes mutual coupling effects between loads and takes full advantage of the low output impedance of the power supply. Each pair of wires should be as short as possible and twisted or shielded to reduce lead inductance and noise pick-up. If a shield is used, connect one end to the power supply ground terminal and leave the other end disconnected.

If cabling considerations require the use of distribution terminals that are located remotely from the power supply, connect output terminals to the distribution terminals by a pair of twisted or shielded wires. Connect each load to the distribution terminals separately.

Table 7-1. Wire Rating

AWG	10	12	14	16	18	20	22	24	26	28
Suggested maximum Current(amps)*	40	25	20	13	10	7	5	3.5	2.5	1.7
mΩ/ft	1.00	1.59	2.53	4.02	6.39	10.2	16.1	25.7	40.8	64.9
mΩ/m	3.3	5.2	8.3	13.2	21.0	33.5	52.8	84.3	133.9	212.9
*Single conductor in gree air at 30 °C with insulation										

Warning *To satisfy safety requirements, load wires must be heavy enough not to overheat while carrying the short-circuit output current of the power supply.*

Remote Voltage Sensing

Normally, a power supply operating in the constant voltage mode achieves its optimum line and load regulations, its lowest output impedance, drift, and ripple and noise, and its fastest transient recovery performance at the power supply output terminals. If the load is separated from the output terminals by any lead length, some of these performance characteristics will be degraded at the load terminals - usually by an amount proportional to the impedance of the load leads compared with the output impedance of the power supply.

With remote voltage sensing, a feature included in the Agilent E3632A power supply, it is possible to connect the input of the voltage feedback amplifier directly to the load terminals so that the regulator performs its function with respect to the load terminals rather than with respect to the power supply output terminals. Thus, the voltage at the power supply output terminals shifts by whatever amount is necessary to compensate for the voltage drop in the load leads, thereby maintaining the voltage at the load terminals constant.

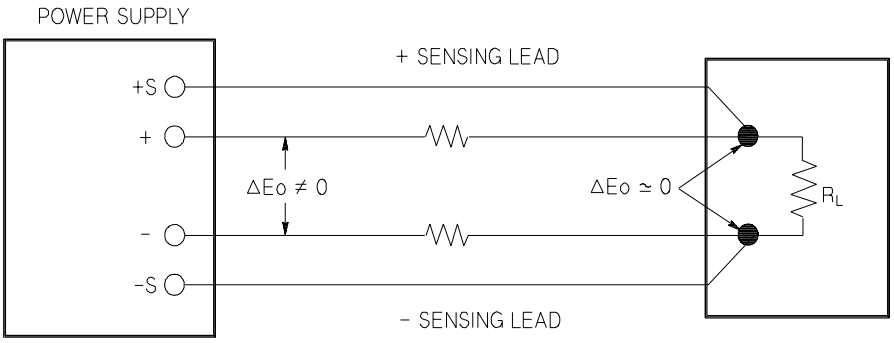

Figure 7-7. Regulated Power Supply with Remote Sensing

Load Consideration

Capacitive Loading

In most cases, the power supply will be stable for almost any size load capacitance. Large load capacitors may cause ringing in the power supply's transient response. It is possible that certain combinations of load capacitance, equivalent series resistance, and load lead inductance will result in instability. If this occurs, the problem may often be solved by either increasing or decreasing the total load capacitance.

A large load capacitor may cause the power supply to cross into CC or unregulated mode momentarily when the output voltage is reprogrammed. The slew rate of the output voltage will be limited to the current setting divided by the total load capacitance (internal and external).

Table 7-2. Slew Rate

Internal Capacitance	Internal Bleed Resistor	Slew Rate at No Load and Full Scale Currnet Setting
470 μF	5 KΩ	1.5 V/msec

Inductive loading

Inductive loads present no loop stability problems in constant voltage mode. In constant current mode, inductive loads form a parallel resonance with the power supply's output capacitor. Generally this will not affect the stability of the power supply, but it may cause ringing of the current in the load.

Pulse Loading

In some applications the load current varies periodically from a minimum to a maximum value. The constant current circuit limits the output current. Some peak loading exceeding the current limit can be obtained due to the output capacitor. To stay within the specifications for the output, the current limit should be set greater than the peak current expected or the supply may go into CC mode or unregulated mode for brief periods.

Reverse Current Loading

An active load connected to the supply may actually deliver a reverse current to the supply during a portion of its operating cycle. An external source can not be allowed to pump current into the supply without risking loss of regulation and possible damage. These effects can be avoided by preloading the output with a dummy load resistor. The dummy load resistor should draw at least the same amount of current from the supply as the active load may deliver to the supply. The value of the current for the dummy load plus the value of the current the load draws from the supply must be less than the maximum current of the supply.

Extending the Voltage and Current Range

The power supply may be able to provide voltages and currents greater than its rated maximum outputs if the power-line voltage is at or above its nominal value. Operation can be extended up to 3% over the rated output without damage to the power supply, but performance can not be guaranteed to meet specifications in this region. If the power-line voltage is maintained in the upper end of the input voltage range, the power supply will probably operate within its specifications. The power supply is more likely to stay within specifications if only one of the voltage or current outputs is exceeded.

Series Connections

Series operation of two or more power supplies can be accomplished up to the output isolation rating of any one supply to obtain a higher voltage than that available from a single supply. Series connected power supplies can be operated with one load across both power supplies or with a separate load for each power supply. The power supply has a reverse polarity diode connected across the output terminals so that if operated in series with other power supplies, damage will not occur if the load is short-circuited or if one power supply is turned on separately from its series partners.

When series connection is used, the output voltage is the sum of the voltages of the individual power supplies. The current is the current of any one power supply. Each of the individual power supplies must be adjusted in order to obtain the total output voltage.

Parallel Connections

Two or more power supplies being capable of CV/CC automatic cross over operation can be connected in parallel to obtain a total output current greater than that available from one power supply. The total output current is the sum of the output currents of the individual power supplies. The output of each power supply can be set separately. The output voltage controls of one power supply should be set to the desired output voltage; the other power supply should be set for a slightly higher output voltage. The supply with the higher output voltage setting will deliver its constant current output, and drop its output voltage until it equals the output of the other supply, and the other supply will remain in constant voltage operation and only deliver that fraction of its rated output current which is necessary to fulfill the total load demand.

Remote Programming

During remote programming a constant-voltage regulated power supply is called upon to change its output voltage rapidly. The most important factor limiting the speed of output voltage change is the output capacitor and load resistor.

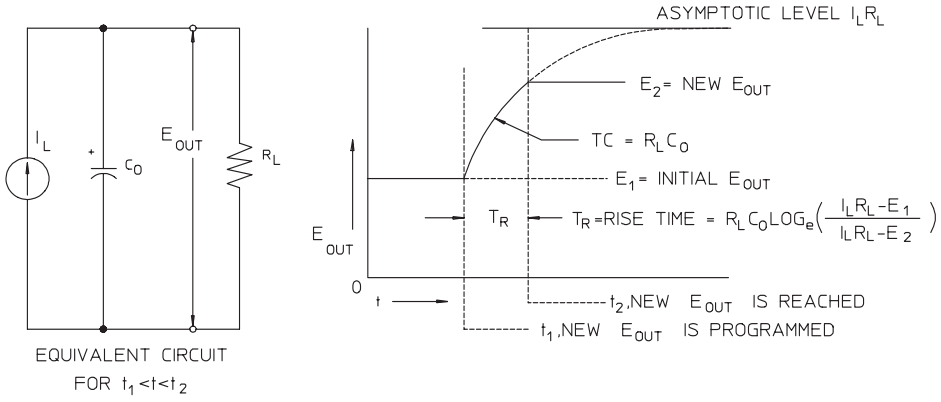

Figure 7-8. Speed of Response - Programming Up (Full Load)

The equivalent circuit and the nature of the output voltage waveform when the supply is being programmed upward are shown in Figure 7-8. When the new output is programmed, the power supply regulator circuit senses that the output is less than desired and turns on the series regulator to its maximum value I_L, the current limit or constant current setting.

This constant current I_L charges the output capacitor C_O and load resistor R_L parallel. The output therefore rises exponentially with a time constant $R_L C_L$ towards voltage level $I_L R_L$, a value higher than the new output voltage being programmed.

When this exponential rise reaches the newly programmed voltage level, the constant voltage amplifier resumes its normal regulating action and holds the output constant. Thus, the rise time can be determined approximately using the formula shown in Figure 7-8.

If no load resistor is attached to the power supply output terminal, then the output voltage will rise linearly at a rate of C_O/I_L when programmed upward, and $T_R = C_O(E_2 - E_1)/I_L$, the shortest possible up-programming time.

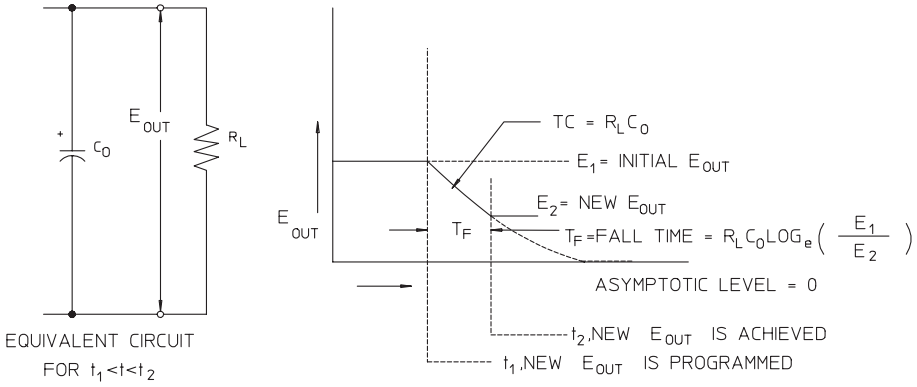

Figure 7-9. Speed of Response - Programming Down

Figure 7-9 shows that when the power supply is programmed down, the regulator senses that the output voltage is higher than desired and turns off the series transistors entirely. Since the control circuit can in no way cause the series regulator transistors to conduct backwards, the output capacitor can only be discharged through the load resistor and internal current source (I_S).

The output voltage decays linearly with slope of I_S/C_O with no load and stops falling when it reaches the new output voltage which has been demanded. If full load is connected, the output voltage will fall exponentially faster.

Since up-programming speed is aided by the conduction of the series regulating transistor, while down programming normally has no active element aiding in the discharge of the output capacitor, laboratory power supplies normally program upward more rapidly than downward.

Reliability

Reliability of electronic semiconductor equipment depends heavily on the temperature of the components. The lower the temperature of the components, the better the reliability. The Agilent E3632A incorporate circuitry to reduce the internal power dissipation of the power supply and therefore reduce the internal heat of the power supply. Maximum internal power dissipation occurs at maximum current. The internal power dissipation further increases as the output voltage is lowered. A fan internal to the Agilent E3632A is essential to keep internal temperatures low. To assist in cooling the Agilent E3632A, the sides and rear of the Agilent E3632A should be kept clear.

8

Specifications

Specifications

The *performance* specifications are listed in the following pages. Specifications are warranted in the temperature range of 0 to 40°C with a resistive load. *Supplemental* characteristics, which are not warranted but are descriptions of performance determined either by design or testing. The *service guide* contains procedures for verifying the performance specifications.

Performance Specifications

Output Ratings(@0°C - 40°C)

Low range	0 to +15 V/0 to 7 A
High range	0 to +30 V/0 to 4 A

Programming Accuracy[1] 12 months(@25°C ± 5°C), ±(% of output + offset)

Voltage	0.05% + 10 mV
Current	0.2% + 10 mA

Readback Accuracy[1] 12 months(over GPIB and RS-232 or front panel with respect to actual output @25°C ± 5°C), ±(% of output + offset)

Voltage	0.05% + 5 mV
Current	0.15% + 5 mA

Ripple and Noise (with outputs ungrounded, or with either output terminal grounded, 20 Hz to 20 MHz)

Normal mode voltage	<0.35 mV rms and 2 mV p-p
Normal mode current	<2 mA rms
Common mode current	<1.5 μA rms

Load Regulation, ±(% of output + offset)

Change in output voltage or current for any load change within ratings with remote sensing connected

Voltage	<0.01% + 2 mV
Current	<0.01% + 250 μA

Line Regulation, ±(% of output + offset)

Change in output voltage and current for any line change within ratings

Voltage	<0.01% + 2 mV
Current	<0.01% + 250 μA

[1]Accuracy specifications are after an 1-hour warm-up with no load and calibration at 25 °C.

Programming Resolution

Voltage	1 mV
Current	0.5 mA

Readback Resolution

Voltage	0.5 mV
Current	0.1 mA

Front Panel Resolution

Voltage	1 mV
Current	1 mA

Transient Response Time

Less than 50 μsec for output to recover to within 15 mV following a change in output current from full load to half load or vice versa

Command Processing Time

Average time for output voltage to begin to change after receipt of digital data when the power supply is connected directly to the GPIB or RS-232 is less than 100 msec

OVP and OCP Accuracy, ±(% of output + offset)

OVP	0.5% + 0.5 V
OCP	0.5% + 0.5 A

Activation time : Average time for output to start to drop after OVP or OCPcondition occurs.

OVP	<1.5 msec when the trip voltage is equal or greater than 3 V <10 msec when the trip voltage is less than 3 V
OCP	<10 msec

Supplemental Characteristics

Output Programming Range (maximum programmable values)

Low range	0 to 15.45 V/0 to 7.21A
High range	0 to 30.9 V/0 to 4.12 A
OVP	1 V to 32 V
OCP	0 A to 7.5 A

Remote Sensing Capability

Voltage drop	Up to 1 V per each lead
Load regulation	Add 5 mV to spec for each 1-volt change in the + output lead due to load current changes.
Load voltage	Subtract voltage drop in load leads from specified output voltage rating.

Temperature Coefficient, ±(% of output + offset)

Maximum change in output/readback per °C after a 30-minute warm-up

Voltage	0.01% + 3 mV
Current	0.02% + 3 mA

Stability, ±(% of output + offset)

Following 1 hour warm-up, change in output over 8 hours under constant load, line, and ambient temperature

Voltage	0.02% + 1 mV
Current	0.1% + 1 mA

Voltage Programming Speed

Maximum time required for output voltage to settle within 1% of its total excursion (for resistive load). Excludes command processing time.

	Full load	No laod
Up	50 msec	20 msec
Down	45 msec	400 msec

Output Terminal Isolation (maximum, from chassis ground)

±60 Vdc when connecting shorting conductors without insulation to the (+) output to the (+) sense and the (-) output and the (-) sense terminals.

±240 Vdc when connecting insulated shorting conductors to the (+) output to the (+) sense and the (-) output and the (-) sense terminals.

AC Input Ratings (selectable via rear panel selector)

std	115 Vac ± 10%, 47 to 63 Hz
opt 0E3	230 Vac ± 10%, 47 to 63 Hz
opt 0E9	100 Vac ± 10%, 47 to 63 Hz

Maximum Input Power

500 VA with full load

Cooling

Fan cooled

Operating Temperature

0 to 40 °C for full rated output. At higher temperatures, the output current is derated linearly to 50% at 55 °C maximum temperature.

Output Voltage Overshoot

During turn-on or turn-off of ac power, output plus overshoot will not exceed 1 V if the output control is set to less than 1 V. If the output control is set to 1 V or higher, there is no overshoot.

Programming Language

SCPI (Standard Commands for Programmable Instruments)

State Storage Memory

Three (3) user-configurable stored states

Recommended Calibration Interval

1 year

Dimensions*

213 mmW x 133 mmH x 348 mmD (8.4 x 5.2 x 13.7 in)

**See below for detailed information.*

Weight

Net	9.5 kg (21 lb)
Shipping	12 kg (26 lb)

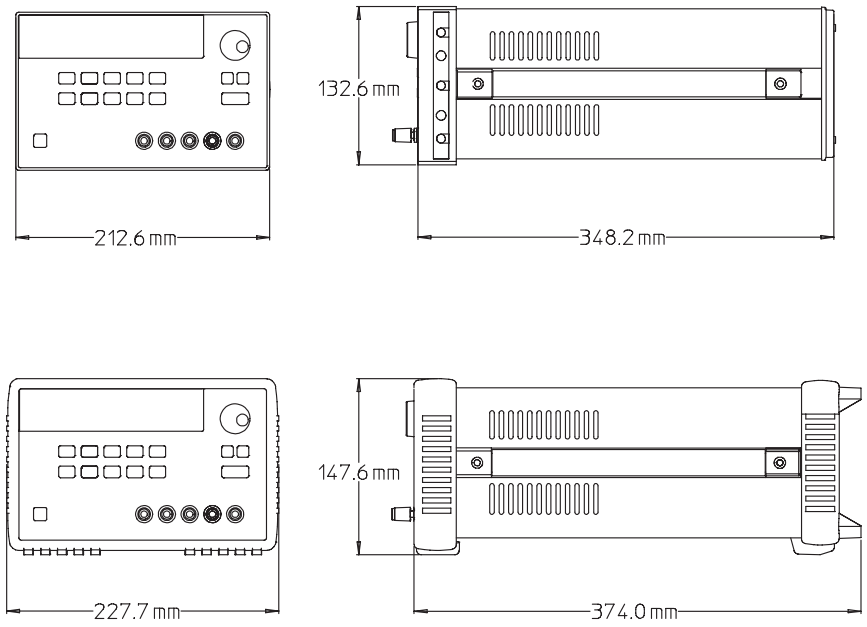

Figure 8-1. Dimensions of Agilent E3632A Power Supply

Index

If you have questions relating to the operation of the power supply, call 1-800-829-4444 in the United States, or contact your nearest Alient Technologies Sales Office.

A

accessories, 15
active load, 150
adapter kit, Agilent 34399A, 63
address, GPIB, 57-58
address, GPIB bus controller, 56
annunciators, 5
application programs, 132-138
asterisk (*), 114

B

basic tests
  output checkout, 29-31
  power-on self-test, 28
  preliminary checkout, 27
battery charging, 44
baud rate, 57, 62
bench operation, 19
brace, 73, 112
bus controller, interrupt, 106

C

cable
  crossover, 63
  DTE-to-DTE interface, 63
  modem-eliminator, 63
  null-modem, 63
  cable kit, Agilent 34398A, 63-64
calibration
  changing security code, 69
  count, 70
  error, 129-130
  message, 70
  secure, 68
  security, 66
  security code, 66
  unsecure, 67
calibration commands, 96-98
character frame, 62
checkout
  current output, 30
  output checkout, 29-31
  power-on checkout, 28
  preliminary checkout, 27
  voltage output, 29
colon, 111-113
command
  *CLS, 109
  *ESE, 109
  *ESR?, 109
  *IDN?, 94
  *OPC, 107, 109
  *OPC?, 109
  *PSC, 109
  *PSC?, 110
  *RCL, 95
  *RST, 94
  *SAV, 95
  *SRE, 110
  *SRE?, 110
  *STB?, 106, 110
  *TRG, 91
  *TST?, 95
  *WAI, 110
  APPLy, 81
  APPLy?, 81
  CALibration:COUNt?, 96
  CALibration:CURRent, 96
  CALibration:CURRent:LEVel, 96
  CALibration:CURRent:PROTection, 96
  CALibration:DAC:ERRor, 97
  CALibration:SECure:CODE, 97
  CALibration:SECure:STATe, 97
  CALibration:SECure:STATe?, 97
  CALibration:STRing, 97
  CALibration:STRing?, 97
  CALibration:VOLTage:LEVel, 98
  CALibration:VOLTage:PROTection, 98
  CURRent, 82
  CURRent:PROTection, 84
  CURRent:PROTection:CLEar, 84
  CURRent:PROTection:STATe, 84
  CURRent:PROTection:STATe?, 84
  CURRent:PROTection:TRIPped?, 84
  CURRent:PROTection?, 84
  CURRent:STEP, 83
  CURRent:STEP?, 83
  CURRent:TRIGgered, 83
  CURRent:TRIGgered?, 83
  CURRent?, 83
  device clear, 99
  DISPlay, 92
  DISPlay:TEXT, 92
  DISPlay:TEXT:CLEar, 92
  DISPlay:TEXT?, 92
  DISPlay?, 92
  INITiate, 91
  MEASure:CURRent?, 88
  MEASure?, 88
  OUTPut, 92
  OUTPut:RELay, 93
  OUTPut:RELay?, 93
  OUTPut?, 92
  STATus:QUEStionable:CONDition?, 108
  STATus:QUEStionable:ENABle, 109
  STATus:QUEStionable:ENABle?, 109
  STATus:QUEStionable?, 108
  SYSTem:BEEPer, 93
  SYSTem:ERRor?, 93, 108
  SYSTem:LOCal, 99
  SYSTem:REMote, 99
  SYSTem:RWLock, 99
  SYSTem:VERSion?, 94
  TRIGger:DELay, 91
  TRIGger:DELay?, 91
  TRIGger:SOURce, 91
  TRIGger:SOURce?, 91
  VOLTage, 85
  VOLTage:PROTection, 86
  VOLTage:PROTection:CLEar, 87
  VOLTage:PROTection:STATe, 87
  VOLTage:PROTection:STATe?, 87
  VOLTage:PROTection:TRIPped?, 87
  VOLTage:PROTection?, 87
  VOLTage:RANGe, 87
  VOLTage:RANGe?, 87
  VOLTage:STEP, 86
  VOLTage:STEP?, 86
  VOLTage:TRIGgered, 86
  VOLTage:TRIGgered?, 86
  VOLTage?, 85
commands format, 112
command separator, 113
command syntax, 112
command terminator, 114
common commands, 114
configuration, remote interface, 56-60
connections
  parallel, 151
  series, 151
connector, GPIB, 61
constant current operation, 38, 39
constant voltage amplifier, 152

constant voltage operation, 36, 37
constant-current mode, 143, 144
constant-voltage mode, 143, 144
controller, 17
cooling, 19
cooling fan, 19
coupling effects, 147
current limit, 36, 144
current output checkout, 30

D

data frame, 62
deadlock, 65
device specific commands, 119
disabling output, 50
display annunciators, 5
display control, 54
distribution terminals, 147
down-programming speed, 153
DSR, 64
DTE, 63-64
DTR, 64
DTR/DSR handshake protocol, 64
dummy load resistor, 150

E

enable register?, 100
error, 122
  calibration, 129-130
  excution, 123-127
  self-test, 128
error conditions, 53
error message, 122-130
error queue 122
event register, 100
external voltage source, 147

F

features, 1
feedback control, 141
firmware revision query, 55
front panel
  drawing, 2
  enable/disable, 54
  key descriptions, 3
  operation overview, 35
  voltage and current settings, 4
front panel message, 54
fuse rating, 27

G

GPIB address, 57-58
  factory setting, 28
GPIB cable, 15
GPIB connector, 61
GPIB interface, 56
GPIB interface configuration, 61

H

halting an output, 116

I

ideal constant-current supply, 143
ideal constant-voltage supply, 143
ideal power supply, 145
IEEE-488 common commands, 114
IEEE-488 conformance information, 120
initial inspection, 19
  electrical check, 19
  mechanical check, 19
input power, 22-23
input power selection, 22
installation, 19-21
interface, GPIB, 56
interface, RS-232, 56

K

key
  Calibrate, 67-68
  Display Limit, 35
  I/O Config, 6
  Local, 35
  On/Off, 35, 50
  Secure, 67-69
key descriptions, 3
keyword
  root, 111
  second-level, 111
  third-level, 111
knob locking, 50-51

L

limit mode, 17, 35
line fuse, 22
linear power supplies, 141
load
  active, 150
  capacitive loading, 149
  inductive loading, 149
  pulse loading, 149
  reverse current loading, 150
locking knob control, 50-51
loop stability, 149
low-level commands, 78

M

MAV bit, 106
MAX parameter, 113
memory locations , 95
message
  CAL MODE, 67-69
meter mode, 17, 28
MIN parameters, 113
multiple loads, 147

N

noise
  common mode current, 145
  normal mode voltage, 145
non-SCPI commands, 119

O

OCP programming
  enable OCP, 45
OCP programming, 45-47
  check OCP operation, 46
  clear OC condition, 46
  trip level setting, 45
operating range, 151
operation overview, 141-142
options, 15
output buffer, 104, 107
output characteristics, 143-146
output identifier, 80
output impedance, 143
output isolation, 147
output Off state, 50
output setting commands, 82-88
OVP programming, 42-44
  check OVP Operation, 43
  clear OV condition, 43
  enabling OVP, 42
  trip level setting, 42

P

parameter
  boolean, 115
  discrete, 115
  numeric, 115
  string, 115
parity, 57, 59, 62
performance specifications, 156-158
power dissipation, 154
power-line cord, 22
Power-line voltage selection, 22
power-on/reset state, 29-30, 36
preregulation, 141
program, 132-138
programming overview, 78-80
programming ranges, 80
programming speed, 152-153
  down, 153
  up, 152
protocol, DTR/DSR handshake, 64

Q

query, 79, 114
query command, 79
query response, 79
questionable status register, 102

R

rack mounting, 20
rack mounting kit
  adapter kit, 20
  filler panel, 21
  flange kit, 21
  lock-link kit, 21
  shelf, 21
  slide kit, 21
  sliding support shelf, 21
rear panel
  drawing, 6
  GPIB connector, 6
  RS-232 connector, 6
recall mode, 41
recalling operating states, 40-41
rectifier, 141
resister
  questionable status, 102
  questionable status enable, 102
  questionable status event, 102
  standard event, 103-104
  standard event enable, 104
  status byte, 104, 106
  status byte enable, 105
  status byte summary, 105
register, enable, 100
register, event, 100
reliability, 154
remote interface configuration, 56-60
remote voltage sensing, 48-49, 148
  connections, 49
reverse polarity diode, 151
RS-232 adapter, kit, 15
RS-232 interface, 56
RS-232 interface command, 99
RS-232 interface configuration, 62-65

S

safety and EMC requirements, 14
safety considerations, 14
SCPI command summary, 73-77
SCPI command terminator, 114
SCPI confirmed command, 117
SCPI conformance, 117-119
SCPI language introduction, 111-115
SCPI parameters, 115
SCPI status registers, 100-107
SCPI version, 55
SCPI version query, 55
self-test, 52
semicolon, 113
series connection, 151
series regulated power supplies, 141
series resistance, 141
service request, 105
setting baud rate, 59
setting GPIB address, 58
setting parity, 59
slew rate, 149
specifications, 156-161
square brackets, 73, 112
stability, 149
standard event register, 103
start bit, 62
status byte register, 104
status register, 100-107
status reporting commands, 108-110
  command, 109
stop bit, 62
storing operating states, 40-41
subsystems, 111
supplemental characteristics, 156, 159-161
system-related commands, 92-95

T

temperature range, 19
transformer tap, 141
tree system, 111
triangle brackets, 73, 112
trigger source, 79, 89
  bus (software) triggering, 89
  immediate triggering, 90
triggering commands, 89-91
troubleshooting, RS-232, 65

U

unregulated state (condition), 145
unregulated sate, 145
unwanted signal, 145
up programming response, 152

V

vertical bar, 73
VFD, 17
voltage limit, 38, 144
voltage output checkout, 29
voltage spikes, 146

W

wiring adapter, 63

Copyright© 1997 - 2007
Agilent Technologies
All Rights Reserved.

Printing History
Edition 3, October 2007

New editions are complete revisions of the manual. Update packages, which are issued between editions, may contain additional information and replacement pages which you merge into the manual. The dates on this page change only when a new edition is published.

Trademark Information
Windows, Windows 95, and Windows NT are registered trademarks of Microsoft Corp.

Certification
Agilent Technologies certifies that this product met its published specifications at the time of shipment. Agilent further certifies that its calibration measurements are traceable to the United States National Institute of Standards and Technology (formerly National Bureau of Standards), to the extent allowed by that organization's calibration facility, and to the calibration facilities of other International Standards Organization members.

Warranty
This Agilent product is warranted against defects in materials and workmanship for a period of one year from date of shipment. Duration and conditions of warranty for this product may be superseded when the product is integrated into (becomes a part of) other Agilent products.
During the warranty period, Agilent will, at its option, either repair or replace products which prove to be defective. The warranty period begins on the date of delivery or on the date of installation if installed by Agilent.

Warranty Service
For warranty service or repair, this product must be returned to a service facility designated by Agilent.

For products returned to Agilent for warranty service, the Buyer shall prepay shipping charges to Agilent and Agilent shall pay shipping charges to return the product to the Buyer. However, the Buyer shall pay all shipping charges, duties, and taxes for products returned to Agilent from another country.

Limitation of Warranty
The foregoing warranty shall not apply to defects resulting from improper or inadequate maintenance by the Buyer, Buyer-supplied products or interfacing, unauthorized modification or misuse, operation outside of the environmental specifications for the product, or improper site preparation or maintenance.

The design and implementation of any circuit on this product is the sole responsibility of the Buyer. Agilent does not warrant the Buyer's circuitry or malfunctions of Agilent products that result from the Buyer's circuitry. In addition, Agilent does not warrant any damage that occurs as a result of the Buyer's circuit or any defects that result from Buyer-supplied products.

To the extent allowed by local law, Agilent makes no other warranty, expressed or implied, whether written or oral with respect to this product and specifically disclaims any implied warranty or condition of merchantability, fitness for a particular purpose or satisfactory quality.

For transactions in Australia and New Zealand: The warranty terms contained in this statement, except to the extent lawfully permitted, do not exclude, restrict, or modify and are in addition to the mandatory statutory rights applicable to the sale of this product.

Exclusive Remedies
To the extent allowed by local law, the remedies provided herein are the Buyer's sole and exclusive remedies. Agilent shall not be liable for any direct, indirect, special, incidental, or consequential damages (including lost profit or data), whether based on warranty, contract, tort, or any other legal theory.

Notice
The information contained in this document is subject to change without notice.

To the extent allowed by local law, Agilent makes no warranty of any kind with regard to this material, including, but not limited to, the implied warranties of merchantability and fitness for a particular purpose.

To the extent allowed by local law, Agilent shall not be liable for errors contained herein or for incidental or consequential damages in connection with the furnishing, performance, or use of this material. No part of this document may be photocopied, reproduced, or translated to another language without the prior written consent of Agilent.

Restricted Rights
The Software and Documentation have been developed entirely at private expense. They are delivered and licensed as "commercial computer software" as defined in DFARS 252.227-7013 (Oct 1988), DFARS 252.211-7015 (May 1991), or DFARS 252.227-7014 (Jun 1995), as a "commercial item" as defined in FAR 2.101(a), or as "restricted computer software" as defined in FAR 52.227-19 (Jun 1987) (or any equivalent agency regulation or contract clause), whichever is applicable. You have only those rights provided for such Software and Documentation by the applicable FAR or DFARS clause or the Agilent standard software agreement for the product involved.

Safety Information
Do not install substitute parts or perform any unauthorized modification to the product. Return the product to an HP Sales and Service Office for service and repair to ensure that safety features are maintained.

Safety Symbols

Warning
Calls attention to a procedure, practice, or condition, that could possibly cause bodily injury or death.

Caution
Calls attention to a procedure, practice, or condition that could possibly cause damage to equipment or permanent loss of data.



Earth ground symbol.

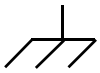

Chassis ground symbol.



Refer to the manual for specific Warning or Caution information to avoid personal injury or equipment damage.
Hazardous voltages may be present.

Warning

No operator serviceable parts inside. Refer servicing to service-trained personnel.

Warning

For continued protection against fire, replace the line fuse only with a fuse of the specified type and rating.

Manual Part Number: E3632-90001

Printed: October 2007 Edition 3
Printed in Malaysia

Agilent Technologies	**DECLARATION OF CONFORMITY** According to ISO/IEC Guide 22 and CEN/CENELEC EN 45014	CE

Manufacturer's Name and Addresss

Responsible Party
Agilent Technologies, Inc.
550 Clark Drive, Suite 101
Budd Lake, New Jersey 07828
USA

Alternate Manufacturing Site
Agilent Technologies (Malaysia) Sdn. Bhd
Malaysia Manufacturing
Bayan Lepas Free Industrial Zone, PH III
11900 Penang,
Malaysia

Declares under sole responsibility that the product as originally delivered

Product Name:
a) Single Output dc Power Supply (dual range)
b) Single Output dc Power Supply (single range)
c) Single Output System Power Supply
d) Multiple Output dc Power Supply
e) Multiple Output System dc Power Supply

Model Number:
a) E3610A, E3611A, E3612A
b) E3614A, E3615A, E3616A, E3617A
c) E3632A
d) E3620A, E3630A
e) E3631A

Product Options: This declaration covers all options of the above product(s).

Complies with the essential requirements of the Low Voltage Directive 73/23/EEC and the EMC Directive 89/336/EEC (including 93/68/EEC) and carries the CE Marking accordingly.

EMC Information ISM Group 1 Class A Emissions

As detailed in Electromagnetic Compatibility (EMC), Certificate of Conformance Number CC/TCF/00/102 based on Technical Construction File (TCF) ANJ12, dated Dec.20, 2000.

Assessed by: Celestica Ltd, Appointed Competent Body
Westfields House, West Avenue
Kidsgrove, Stoke-on-Trent
Straffordshire, ST7 1TL
United Kingdom

Safety Information and Conforms to the following safety standards.

IEC 61010-1:2001 / EN 61010-1:2001
CSA C22.2 No. 1010.1:1992

This DoC applies to above-listed products placed on the EU market after:

January 1, 2004
Date

Bill Darcy/ Regulations Manager

For further information, please contact your local Agilent Technologies sales office, agent or distributor, or
Agilent Technologies Deutschland GmbH, Herrenberger Strabe 130, D71034 Böblingen, Germany

www.agilent.com

Contact us

To obtain service, warranty or technical support assistance, contact us at the following phone numbers:

United States:
(tel) 800 829 4444 (fax) 800 829 4433
Canada:
(tel) 877 894 4414 (fax) 800 746 4866
China:
(tel) 800 810 0189 (fax) 800 820 2816
Europe:
(tel) 31 20 547 2111
Japan:
(tel) (81) 426 56 7832 (fax) (81) 426 56 7840
Korea:
(tel) (080) 769 0800 (fax) (080) 769 0900
Latin America:
(tel) (305) 269 7500
Taiwan:
(tel) 0800 047 866 (fax) 0800 286 331
Other Asia Pacific Countries:
(tel) (65) 6375 8100 (fax) (65) 6755 0042

Or visit Agilent worlwide Web at:
www.agilent.com/find/assist

Product specifications and descriptions in this document are subject to change without notice.

© Agilent Technologies, Inc. 1997-2007

Printed in Malaysia
Third Edition, October 2007

E3632-90001



Agilent Technologies