E43906

Lock nut for mounting adapter

LOCK NUT G1",POM

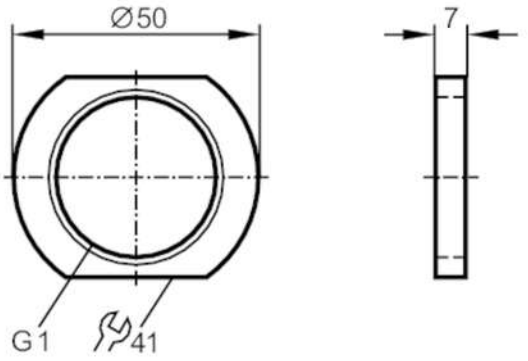

Application		
Design		for mounting adapters
Operating conditions		
Ambient temperature	[°C]	-25...80
Mechanical data		
Weight	[g]	19.5
Dimensions	[mm]	G 1
Thread designation		G 1
External diameter	[mm]	50
Materials		POM
Remarks		
Pack quantity		1 pcs.