LR9020

Continuous level sensor (guided wave radar)

LR0000--BR34A1DKG/US

Please see the technical note under "Downloads"
For high process temperatures: The temperature at the process connection is decisive. The actual medium temperature may be higher.

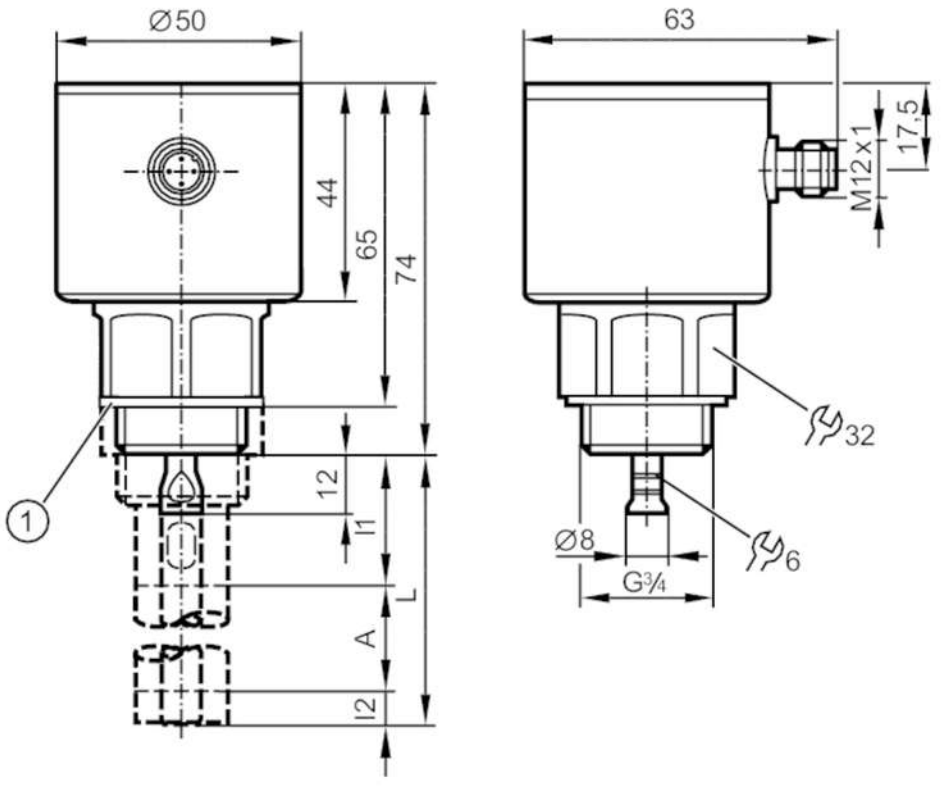

1 Sealing
A active range
I1 / I2 inactive ranges

Product characteristics			
Number of inputs and outputs		Number of analogue outputs: 1	
Probe length L	[mm]	100...1600	
Process connection		threaded connection G 3/4 external thread	
Application			
Special feature		Gold-plated contacts	
Application		for industrial applications	
Media		Liquids	
Dielectric constant of the medium		≥ 1,8; (for media with a dielectric constant of 1.8...5 (e.g. oils), a coaxial pipe is needed for operation)	
Recommended media		water; hydrous media; oils; oil-based media	
Cannot be used for		See the operating instructions, chapter "Function and features".	
Process temperature	[°C]	-25...80; (90 < 1 h ; see note under remarks)	
Pressure rating		16 bar	1.6 MPa
Vacuum resistance		-1000 mbar	-0.1 MPa
MAWP (for applications according to CRN)	[bar]	16	

LR9020

Continuous level sensor (guided wave radar)

LR0000--BR34A1DKG/US

Electrical data		
Operating voltage	[V]	18...30 DC
Current consumption	[mA]	< 25
Protection class		III
Reverse polarity protection		yes
Power-on delay time	[s]	< 3
Measuring principle		guided wave radar
Inputs / outputs		
Number of inputs and outputs		Number of analogue outputs: 1
Outputs		
Total number of outputs		2
Output signal		analogue signal; IO-Link
Electrical design		PNP
Number of analogue outputs		1
Analogue current output	[mA]	4...20, invertible
Max. load	[Ω]	500
Analogue voltage output	[V]	0...10, invertible
Min. load resistance	[Ω]	2000
Short-circuit protection		yes
Type of short-circuit protection		thermal, pulsed
Overload protection		yes
Measuring/setting range		
Probe length L	[mm]	100...1600
Active range A	[mm]	L-40; (when set to oil and oil based media: L-60)
Inactive range I1 / I2	[mm]	30 / 10; (when set to oil and oil based media: 30 / 30)
Sampling rate	[Hz]	4
Accuracy / deviations		
Repeatability	[mm]	± 5
Measuring error	[mm]	± 7
Offset error	[mm]	5
Resolution	[mm]	1
Zero signal (voltage)	[V]	0
Zero signal (current)	[mA]	4
Full signal (voltage)	[V]	10
Full signal (current)	[mA]	20
Temperature drift per 10 K		± 0.2 %
Interfaces		
Communication interface		IO-Link
Transmission type		COM2 (38,4 kBaud)
IO-Link revision		1.1
SDCI standard		IEC 61131-9 CDV
Profiles		no profile

LR9020

Continuous level sensor (guided wave radar)

LR0000--BR34A1DKG/US

SIO mode		no	
Required master port type		A	
Process data analogue		1	
Min. process cycle time	[ms]	2.3	
Supported DeviceIDs		**Type of operation**	**DeviceID**
		default	578
Operating conditions			
Ambient temperature	[°C]	-25...60	
Storage temperature	[°C]	-40...85	
Protection		IP 68; IP 69K; (7 days / 1 m water depth / 0.1 bar: IP 68)	
Tests / approvals			
EMC		DIN EN 61000-6-2	
		DIN EN 61000-6-3	in a closed metal tank
		DIN EN 61000-6-4	in plastic or open metal tanks
Shock resistance		DIN EN 60068-2-27	50 g (11 ms) / 25 g (6 ms) with reference rod 0.5 m
Vibration resistance		DIN EN 60068-2-6	5 g (10...2000 Hz) / 1 g (5...200 Hz) with reference rod 0.5 m
MTTF	[years]	239	
UL approval		UL Approval no.	H009
		File number UL	E174191
Mechanical data			
Weight	[g]	470.9	
Dimensions	[mm]	Ø 50 / L = 86	
Materials		stainless steel (304/1.4301); stainless steel (316L/1.4404); FKM; PEI	
Materials (wetted parts)		stainless steel (303/1.4305); probe connection: stainless steel (316L/1.4435); PTFE; FKM; Sealing: NBR reinforced fibre	
Process connection		threaded connection G 3/4 external thread	
Remarks			
Notes		Please see the technical note under "Downloads"; For high process temperatures: The temperature at the process connection is decisive. The actual medium temperature may be higher.	
Pack quantity		1 pcs.	

Electrical connection

Connector: 1 x M12; coding: A; Contacts: gold-plated



LR9020

Continuous level sensor (guided wave radar)

LR0000--BR34A1DKG/US

Connection

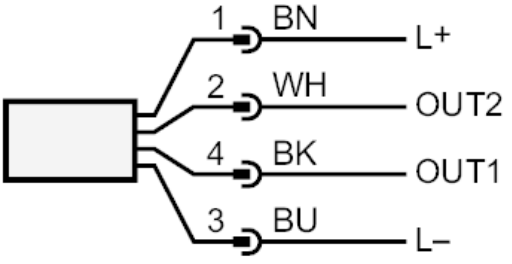

OUT1:	IO-Link
OUT2:	analogue output
	colours to DIN EN 60947-5-2
	Core colours :
BK =	black
BN =	brown
BU =	blue
WH =	white

Diagrams and graphs

Measurement deviation D at the limits of the active rod range

