Brand of NTN Group

Technical data

LK210G2H

Insert bearings



Spherical outer diameter, fixing by adapter sleeve (light weight design), single lip seal

VISUAL (S)

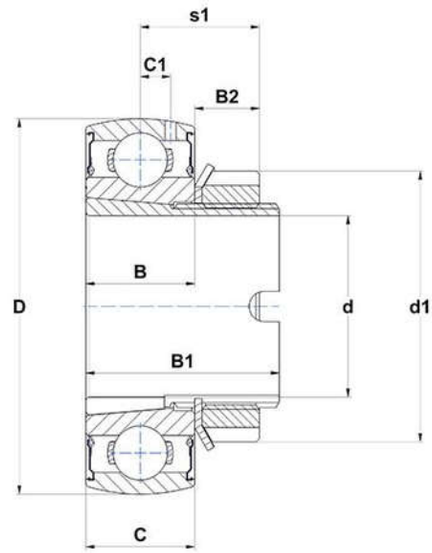

PRODUCT DEFINITION

Brand	SNR
B - Width of Inner Ring	22 mm
B1 - Overall width Inner Ring	40 mm
B2 - Width of eccentric locking collar/nut	14,2 mm
C - Width of Outer Ring	22 mm
C1 - Distance center of OR to center of lubrication zone	6,5 mm
d - Shaft diameter	50 mm
d1 - Outer dia of eccent. Lock. collar / nut of adapter sleeve	70 mm

NTN Europe
1 rue des Usines · BP 2017 · 74010 Annecy Cedex · France · Tel. +33 (0)4 50 65 30 00
S.A. au capital de 322 639 919 € · RCS ANNECY B 325 821 072 · Id. Fiscale : FR 48 325 821 072
SIRET 325 821 072 00015 · Code APE 2815 Z · Code NACE 28.15

LK210G2H
Insert bearings

PRODUCT DEFINITION	
D - Outer diameter of OR	90 mm
f0 - Factor	14.9

PRODUCT PERFORMANCE	
C - Dynamic load rating	33000000 mN
C0 - Static load rating	22900000 mN
Operating temperature min.	253,15 °K
Operating temperature max.	373,15 °K

OTHER FEATURES	
Mass	0,68 kg
Adapter sleeve designation	HLK2310

BEARING FREQUENCIES	
BPFO - Over rolling frequency on outer ring (60 rpm)	4.59678620689655 Hz
BPFI - Over rolling frequency on inner (60 rpm)	6.40321379310345 Hz
BSF - Over rolling frequency on rolling element (60 rpm)	5.92514601620742 Hz
BRF - Rotational frequency – rolling element (60 rpm)	2.96257300810371 Hz
FTF - Rotational frequency - cage (60 rpm)	0.417889655172414 Hz