JUMO GmbH & Co. KG
Delivery address: Mackenrodtstraße 14
36039 Fulda, Germany
Postal address: 36035 Fulda, Germany
Phone: +49 661 6003-0
Fax: +49 661 6003-607
Email: mail@jumo.net
Internet: www.jumo.net

JUMO Instrument Co. Ltd.
JUMO House
Temple Bank, Riverway
Harlow, Essex, CM20 2DY, UK
Phone: +44 1279 63 55 33
Fax: +44 1279 62 50 29
Email: sales@jumo.co.uk
Internet: www.jumo.co.uk

JUMO Process Control, Inc.
6724 Joy Road
East Syracuse, NY 13057, USA
Phone: +1 315 437 5866
Fax: +1 315 437 5860
Email: info.us@jumo.net
Internet: www.jumousa.com

Stainless steel process fittings

- Installation in pipe systems
- Installation in tanks and vessels
- Hygienic version
- FDA conformity of materials
- Probe length 120 mm × 120 mm
- Availability of various process connections



Type 202825/...

Brief description

These fittings are used for holding and protecting sensors.
They can either be fitted directly into existing stainless steel pipe systems or onto container walls.
Type 202825 fittings are mainly installed in industrial plants with increased hygienic requirements. The wetted components and the sealing material used are approved by the FDA (Food and Drug Administration).
Type 202831 fittings are predominantly used in water management and in process engineering.
Both types of fittings are intended to accomodate sensors of 120 mm length. Other lengths to special order.

Additional fittings

Type of fitting	Data Sheet
Flow-through fittings	202810
Immersion fittings	202820, 202821
Quick-change fittings	202822
Pneumatic retractable assembly	202823



Type 202831/...

JUMO GmbH & Co. KG
Delivery address: Mackenrodtstraße 14
36039 Fulda, Germany
Postal address: 36035 Fulda, Germany
Phone: +49 661 6003-0
Fax: +49 661 6003-607
Email: mail@jumo.net
Internet: www.jumo.net

JUMO Instrument Co. Ltd.
JUMO House
Temple Bank, Riverway
Harlow, Essex, CM20 2DY, UK
Phone: +44 1279 63 55 33
Fax: +44 1279 62 50 29
Email: sales@jumo.co.uk
Internet: www.jumo.co.uk

JUMO Process Control, Inc.
6724 Joy Road
East Syracuse, NY 13057, USA
Phone: +1 315 437 5866
Fax: +1 315 437 5860
Email: info.us@jumo.net
Internet: www.jumousa.com

Installation options

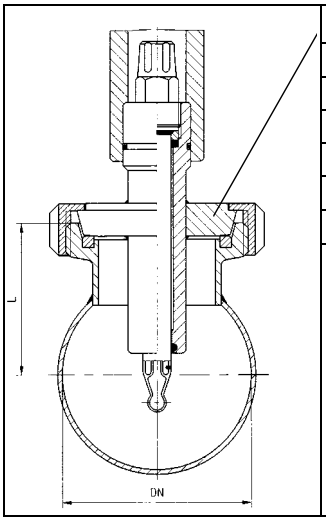

Cone nipple		
DN 50	DN (pipe)	L (fitting dim.)
	DN 50	63 mm
	DN 65	52 mm
	DN 80	63 mm
	DN 100	75 mm
	DN 125	90 mm

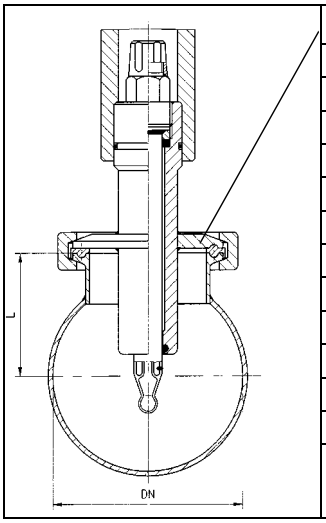

Clamp connection		
DN 25	DN (pipe)	L (fitting dim.)
	DN 40	58 mm
	DN 50	50 mm
	DN 65	50 mm
	DN 80	58 mm
	DN 100	68 mm
	DN 125	81 mm
DN 50	DN (pipe)	L (fitting dim.)
	DN 50	51 mm
	DN 65	40 mm
	DN 80	51 mm
	DN 100	63 mm
	DN 125	77 mm

Technical data

Materials	Wetted components in stainless steel 1.4571 Electropolished, Ra ≤ 0.80 (on type 202825/...) Seal: silicone O-rings (FDA approved)
Permissible temperature[a]	0 to 135 °C
Safe pressure at 25 °C	Up to 10 bar
Electrode holder	Pg 13.5 gland An impedance converter (202995) or an intelligent JUMO digiLine pH/ORP/T electronics (202705) can be incorporated.
Fitting length	See installation options for the appropriate process connection
Protection	IP65, EN 60529
Weight	Depending on the process connection

[a] Please also note the maximum operating data for the sensor used.

JUMO GmbH & Co. KG
Delivery address: Mackenrodtstraße 14
36039 Fulda, Germany
Postal address: 36035 Fulda, Germany
Phone: +49 661 6003-0
Fax: +49 661 6003-607
Email: mail@jumo.net
Internet: www.jumo.net

JUMO Instrument Co. Ltd.
JUMO House
Temple Bank, Riverway
Harlow, Essex, CM20 2DY, UK
Phone: +44 1279 63 55 33
Fax: +44 1279 62 50 29
Email: sales@jumo.co.uk
Internet: www.jumo.co.uk

JUMO Process Control, Inc.
6724 Joy Road
East Syracuse, NY 13057, USA
Phone: +1 315 437 5866
Fax: +1 315 437 5860
Email: info.us@jumo.net
Internet: www.jumousa.com

Dimensions

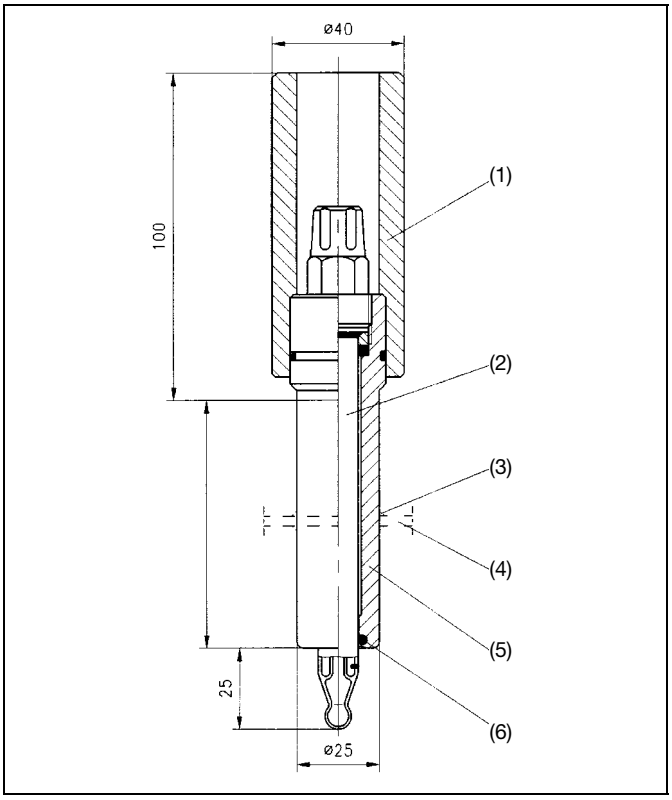

Type 202825/000

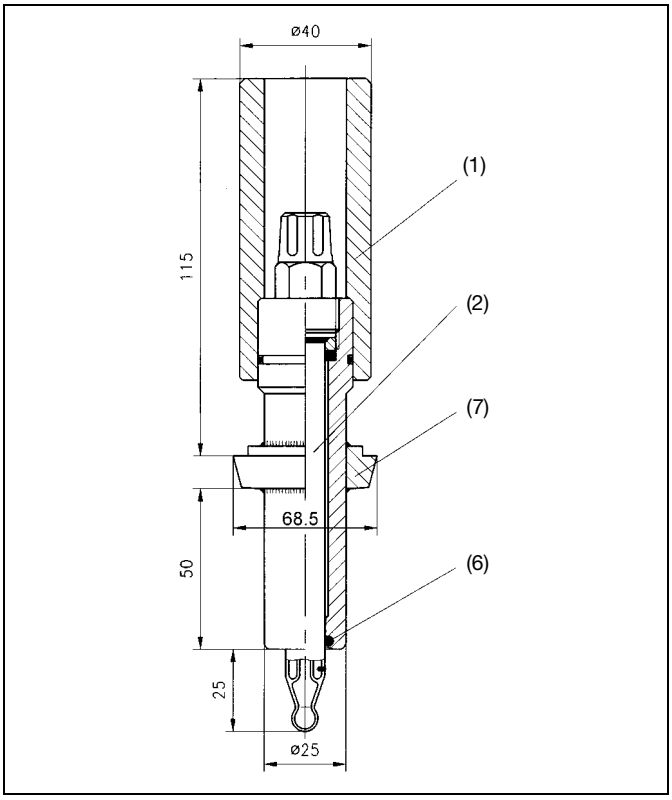

Type 202825/607-26

(1) Protective cap PP polypropylene
(2) Electrode
(3) Weld seam
(4) Container wall
(5) Connection
(6) O-ring, silicone, FDA approved material
(7) Process connection cone nipple, DIN 11851-SD

JUMO GmbH & Co. KG
Delivery address: Mackenrodtstraße 14
36039 Fulda, Germany
Postal address: 36035 Fulda, Germany
Phone: +49 661 6003-0
Fax: +49 661 6003-607
Email: mail@jumo.net
Internet: www.jumo.net

JUMO Instrument Co. Ltd.
JUMO House
Temple Bank, Riverway
Harlow, Essex, CM20 2DY, UK
Phone: +44 1279 63 55 33
Fax: +44 1279 62 50 29
Email: sales@jumo.co.uk
Internet: www.jumo.co.uk

JUMO Process Control, Inc.
6724 Joy Road
East Syracuse, NY 13057, USA
Phone: +1 315 437 5866
Fax: +1 315 437 5860
Email: info.us@jumo.net
Internet: www.jumousa.com

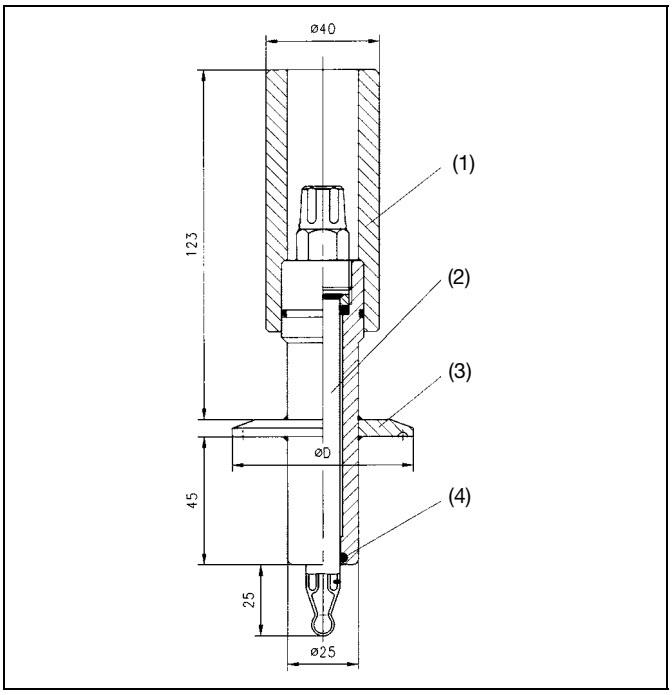

Type 202825/616-26, type 202825/613-26
Clamp connection:
DN 50, Ø D = 64.0 mm dia., L = 45 mm,
DN 25, Ø D = 50.5 mm dia., L = 45 mm

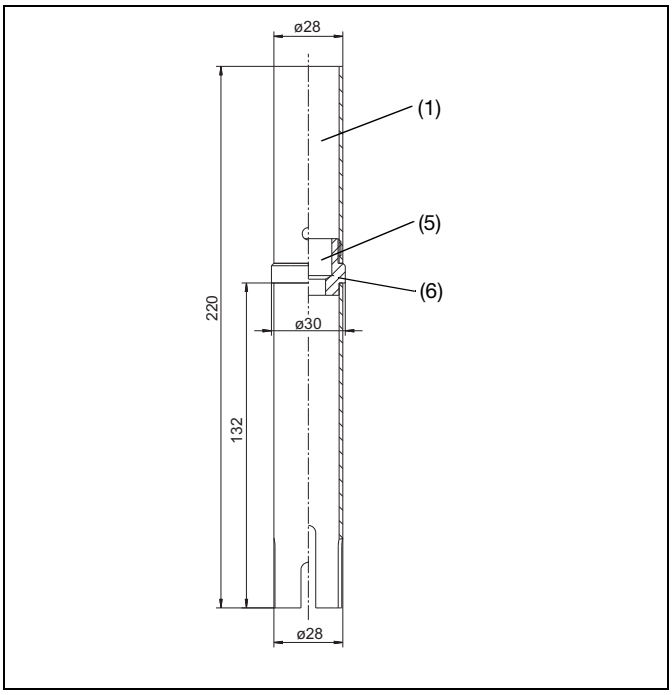

Type 202831/000-26

(1) Protective cap PP polypropylene
(2) Electrode
(3) Process connection clamp connection DN
(4) O-ring, silicone, FDA approved material
(5) Holder Pg13.5 for one sensor
(6) Welding shoulder

JUMO GmbH & Co. KG
Delivery address: Mackenrodtstraße 14
36039 Fulda, Germany
Postal address: 36035 Fulda, Germany
Phone: +49 661 6003-0
Fax: +49 661 6003-607
Email: mail@jumo.net
Internet: www.jumo.net

JUMO Instrument Co. Ltd.
JUMO House
Temple Bank, Riverway
Harlow, Essex, CM20 2DY, UK
Phone: +44 1279 63 55 33
Fax: +44 1279 62 50 29
Email: sales@jumo.co.uk
Internet: www.jumo.co.uk

JUMO Process Control, Inc.
6724 Joy Road
East Syracuse, NY 13057, USA
Phone: +1 315 437 5866
Fax: +1 315 437 5860
Email: info.us@jumo.net
Internet: www.jumousa.com

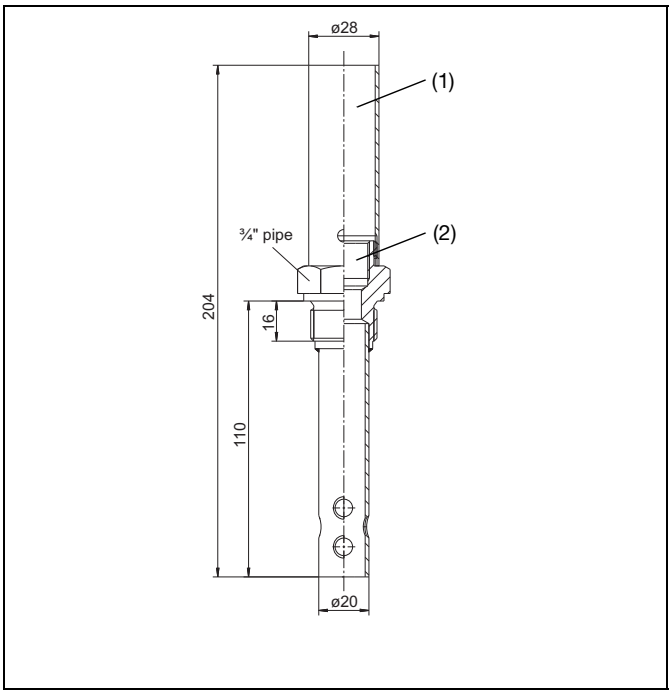

Type 202831/105-26

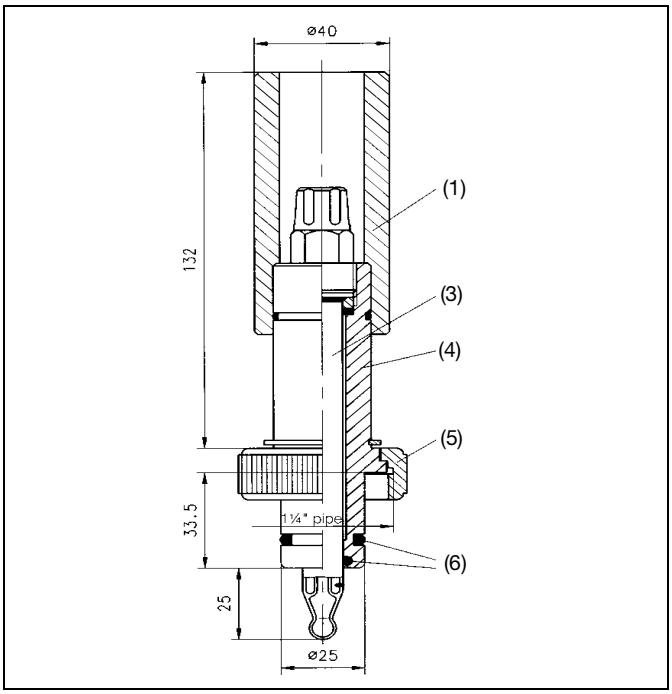

Type 202825/688-26
Ingold connection: 1 1/4" pipe thread, 33.5 mm fitting length (together with nipple 3)

(1) Protective cap against mechanical damage to sensor
(2) Holder Pg13.5 for one sensor
(3) Electrode
(4) Connection
(5) Union nut
(6) O-rings, silicone, FDA approved material

Available weld-in nipples for connection 688

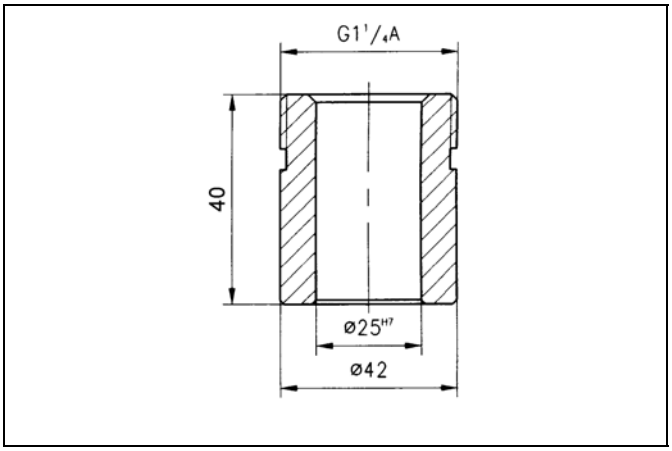

Nipple 1
Part no. 00489164

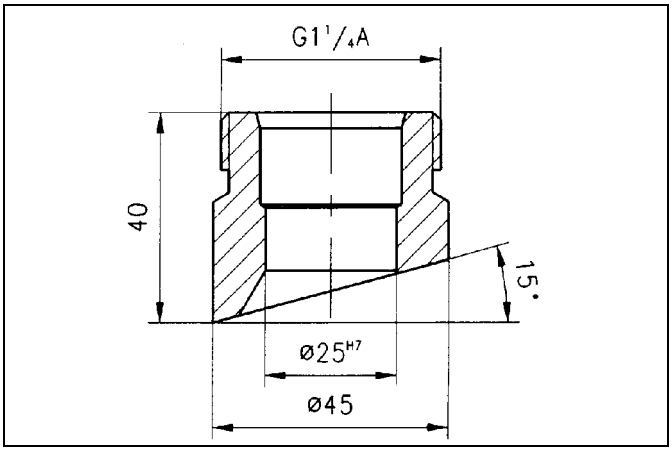

Nipple 3
Part no. 00378208

JUMO GmbH & Co. KG
Delivery address: Mackenrodtstraße 14
36039 Fulda, Germany
Postal address: 36035 Fulda, Germany
Phone: +49 661 6003-0
Fax: +49 661 6003-607
Email: mail@jumo.net
Internet: www.jumo.net

JUMO Instrument Co. Ltd.
JUMO House
Temple Bank, Riverway
Harlow, Essex, CM20 2DY, UK
Phone: +44 1279 63 55 33
Fax: +44 1279 62 50 29
Email: sales@jumo.co.uk
Internet: www.jumo.co.uk

JUMO Process Control, Inc.
6724 Joy Road
East Syracuse, NY 13057, USA
Phone: +1 315 437 5866
Fax: +1 315 437 5860
Email: info.us@jumo.net
Internet: www.jumousa.com

Order details

			(1)	**Basic type**
		202825		Process fittings, suitable for media with increased hygienic requirements
		202831		Process fittings, suitable for use in water management and process engineering
			(2)	**Process connection**
x	x	000		Weld seam
	x	105		Thread 3/4" pipe male
x		607		Cone nippel with union nut DIN 11851-DN 50 (milk cone)
x		613		Clamp DN 25
x		616		Clamp connection (clamp) DIN 32676/2" ISO 2852-DN 50
x		688		Thread 1 1/4" pipe male (Ingold connection)
			(3)	**Material**
x		24		Wetted components in stainless steel 1.4404 (AISI 316L) (special version)
x	x	26		Wetted components in stainless steel 1.4571 (standard material)

	(1)		**(2)**		**(3)**
Order code		/		-	
Order example	202825	/	607	-	26

Stock versions

Type	**Procecc connection**	**Material**	**Part no.**
202831/105-26	Thread 3/4" pipe male	Wetted components in stainless steel 1.4571 (standard material)	00302474

Production versions

Type	**Part no.**
202825/000-26	00358137
202825/607-26	00357679
202825/613-26	00358134
202825/616-26	00358133

Accessories

Type	**Teile-Nr.**
KCl reservoir, pressure-resistant (PG209791)	00060254
Mounting bracket for flow-through fitting (PG209791)	00455706

Note:
The type code is a type designation, not a modular system.
If at all possible, please choose the items listed under **"Stock versions"** or **"Production versions"** when ordering.
Any free combination of individual code features must be technically checked by us and released.
Please ask us in case of doubt !