RE22 CONTROLLER

LUMEL

Features:

- Password protection
- PID algorithm
- on/off algorithm
- Auto-tuning
- IP65
- Soft Start
- Auto

Inputs:

- 0..10 V
- 0 .. 20 mA

Outputs:

- SSR output

Galvanic isolation:

- Supply
- RS 485



- Universal input for RTD and TC sensors or standard signals from transducers.
- Relay output or binary 0/5 V for relay of SSR type.
- Control of on/off type or PID with auto-tuning.
- „Soft-start" function.
- Manual operating option.

Example of application

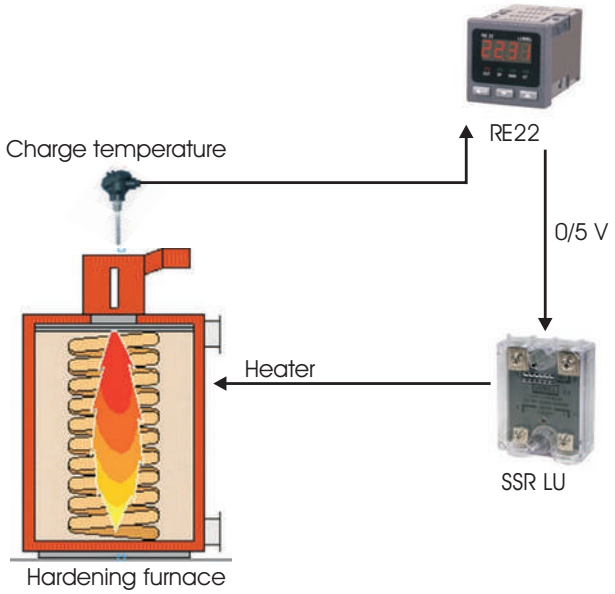

Temperature control in a hardening furnace.

Input

Input type	Designation	Range	Error
Pt100	Pt100	-199 .. 850°C	0.2%
Pt1000	Pt1000	-199 .. 850°C	0.2%
Fe-CuNi	J	-100 .. 1200°C	0.3%
Cu-CuNi	T	-100 .. 400°C	0.3%
NiCr-NiAl	K	-100 .. 1372°C	0.3%
PtRh10-Pt	S	0 .. 1767°C	0.5%
PtRh13-Pt	R	0 .. 1767°C	0.5%
PtRh30-PtRh6	B	0 .. 1820°C	0.5%
NiCr-CuNi	E	-100 .. 999°C	0.3%
NiCrSi-NiSi	N	-100 .. 1300°C	0.3%
NiCr-CuNi (GOST)	L	-100 .. 800°C	0.3%
Current channels	I	0(4) .. 20 mA	0.2% +/- 1 digit
Voltage channels	U	0(5) .. 10 V	0.2% +/- 1 digit

Output

Output type	Properties	Remarks
Relay output	voltageless NO contacts, load capacity 5 A, 250 V a.c.	
Voltageless binary output	load capacity 5 V	resistance limiting the current: 66 Ω

Export department:
+48 68 45 75 139/ 305/ 321/ 368
Fax: +48 68 32 54 091
e-mail: export@lumel.com.pl

„LUMEL" S.A.
ul. Słubicka 1
65-127 Zielona Góra
POLAND
WWW.LUMEL.COM.PL

RE22 CONTROLLER

External features

Readout field	LED	10 mm, 4 digits
Overall dimensions	48 × 48 × 93 mm	
Weight	0.25 kg	
Protection grade	from frontal side: IP65	from terminal side: IP20

Rated operating conditions

Supply voltage	230; 110; 24 V a.c. +/- 10%	frequency: 50 .. 60 Hz
Temperature	ambient: 0...23...50°C	storage: -20...70°C
Humidity	< 85% without condensation	
Operating position	any	
External magnetic field	< 400 A/m	

Safety and compatibility requirements

Electromagnetic compatibility	noise immunity	acc. to EN 61000-6-2
	noise emissions	acc. to EN 61000-6-4
Pollution level	2	
Installation category	III	
Maximal phase-to-earth operating voltage	for supply circuit, outputs: 300 V	for input circuits: 50 V
Altitude above sea level	< 2000 m	

Connection diagrams

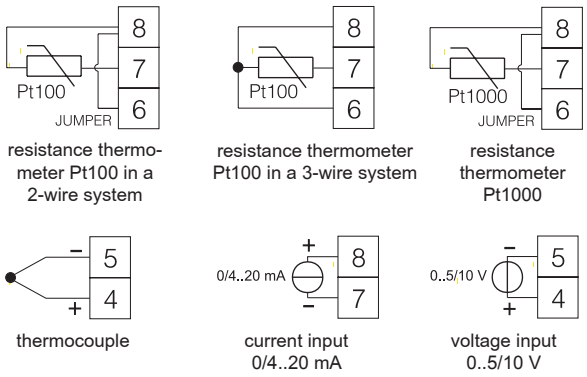

Fig.1. Connection of input signals.

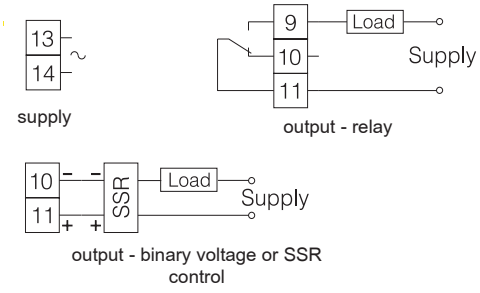

Fig.2. Connection of supply and load circuit.

Ordering

RE22 -	X	X	X	XX	X
Input:					
universal for RTD and TC sensors	1				
universal linear: - current: 0/4..20 mA - voltage: 0..5/10V	2				
as per order	X				
Output:					
relay		1			
binary 0/5 V for SSR control		2			
as per order		X			
Supply:					
230 V 50/60 Hz			1		
110 V 50/60 Hz			2		
24 V 50/60 Hz			3		
as per order			X		
Version:					
standard				00	
custom-made*				XX	
Additional quality requirements:					
without additional quality requirements					8
with an extra inspection quality certificate					7
acc. to customer's request*					X

* the ordering code will be established by the manufacturer

Order example:
The code: **RE22 - 2 1 3 00 8** means:
RE22 - controller of RE22 type
2 - universal linear input
1 - relay input
3 - supply: 24 V 50/60 Hz
00 - standard version
8 - without additional quality requirements.

See also



SSR relay, LU series.



RP power controller.



Temperature sensors.



For more information about LUMEL's products please visit our website:
www.lumel.com.pl

Export department:
+48 68 45 75 139/ 305/ 321/ 368
Fax: +48 68 32 54 091
e-mail: export@lumel.com.pl

„LUMEL" S.A.
ul. Słubicka 1
65-127 Zielona Góra
POLAND
WWW.LUMEL.COM.PL