Features and Benefits

- Magnetic technology offers robust performance.
- 100% Non-contacting design (no bearings or bushing) provides an extremely long life expectancy and is tolerant to harsh environments.
- Simple two piece design (target magnet + encoder) for easy alignment and installation.
- Bi-directional two channel incremental quadrature output.
- Mounting holes for a 2-bolt pattern 1.00 inch B.C. x 0.120 inch O.D.
- Target magnet for standard shaft sizes from 2 mm to 3/8 inch. Custom bore size available.
- Options for 2, 3, 4, 5, 6, 8, and 12 pulse per channel per revolution.
- Customizable lead wires, cables, and or connectors.



Kit - Encoder with Target Magnet

Shown with shaft pass through hole
Wire color order varies with part configuration

Application Example

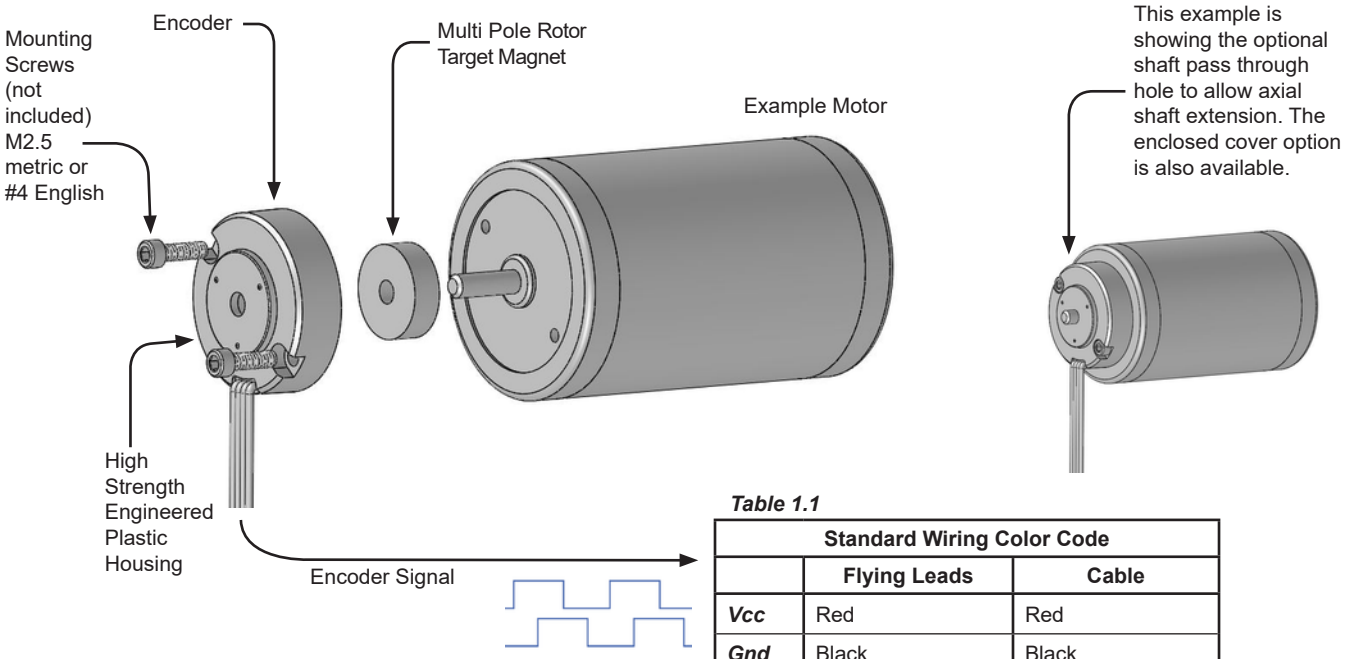

Table 1.1

Standard Wiring Color Code		
	Flying Leads	**Cable**
Vcc	Red	Red
Gnd	Black	Black
Ch A	Yellow	Brown
Ch B	Blue	Orange

Other colors available upon request.
Contact sales@phoenixamerica.com.

Phoenix America, INC
4717 Clubview Drive
Fort Wayne, IN 46804

Tel: (888)-801-1422
Local: (260)-432-9664
Fax: (260)-432-9967

www.phoenixamerica.com
sales@phoenixamerica.com
© Copyright PAI 2017 Rev. 8/1/2017

Output Waveforms

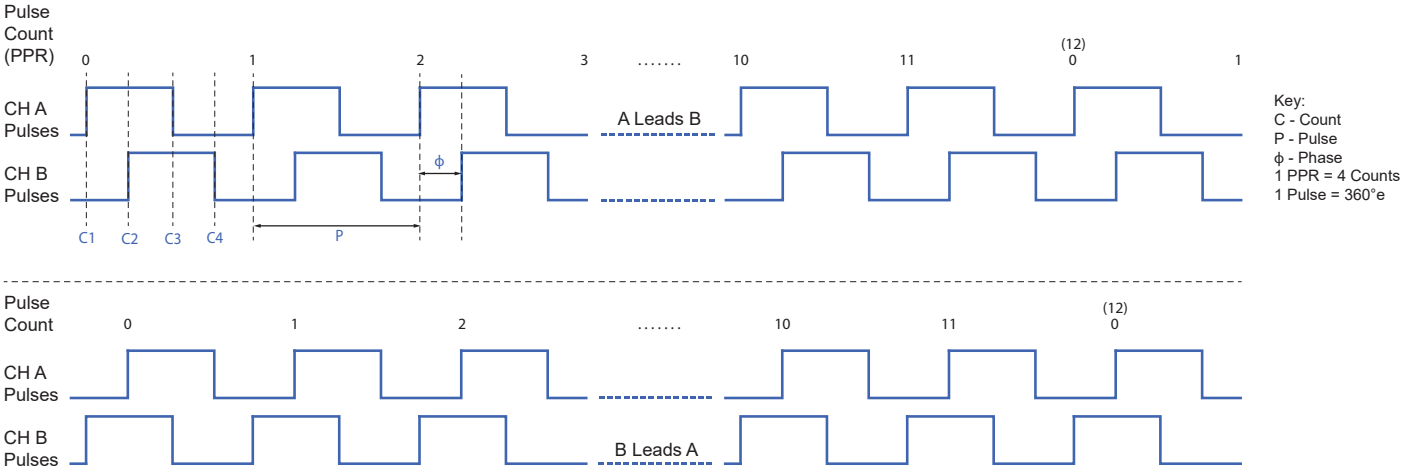

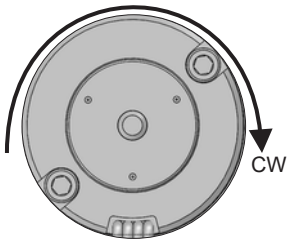

Channel A leads Channel B for clockwise shaft rotation (shaft rotation is defined when looking at the branded face of the encoder).

Absolute Maximum Ratings

Table 2.1

Characteristic	Symbol	Rating	Units
Forward Supply Voltage	V_{CC}	32	V
Reverse Supply Voltage	V_{RCC}	-0.3	V
Output Voltage	V_{OUT}	32	V
Continuous Output Current	I_{OUT}	20	mA
Operating Temperature	T_A	-40 - 125	ºC
Storage Temperature	T_S	-40 - 150	ºC

Electrical Characteristics

Table 2.2

Characteristic	Symbol	Test Conditions	Min.	Typ.[1]	Max.	Unit[2]
Forward Supply Voltage	V_{CC}	Operating, T_J < 165 ºC	4.0	-	24	V
Supply Current	I_{CC}	V_{CC} = 4 to 24V	1.4	3.0	5.6	mA
Output Current	I_{SINK}	V_{CC} = 4 to 24V	-	-	15	mA
Output Frequency	f_{OUT}	V_{CC} = 4 to 24V	-	-	30	kHz

Higher output frequencies available upon request. Contact sales@phoenixamerica.com.

Phoenix America, INC
4717 Clubview Drive
Fort Wayne, IN 46804

Tel: (888)-801-1422
Local: (260)-432-9664
Fax: (260)-432-9967

www.phoenixamerica.com
sales@phoenixamerica.com
© Copyright PAI 2017 Rev. 8/1/2017

Electrical Circuit

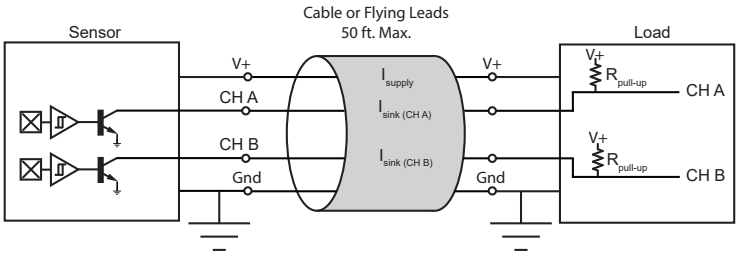

Output channels require customer supplied pull-up resistors unless internal pull-up option is selected. See Table 3.1 for recommended resistor values.

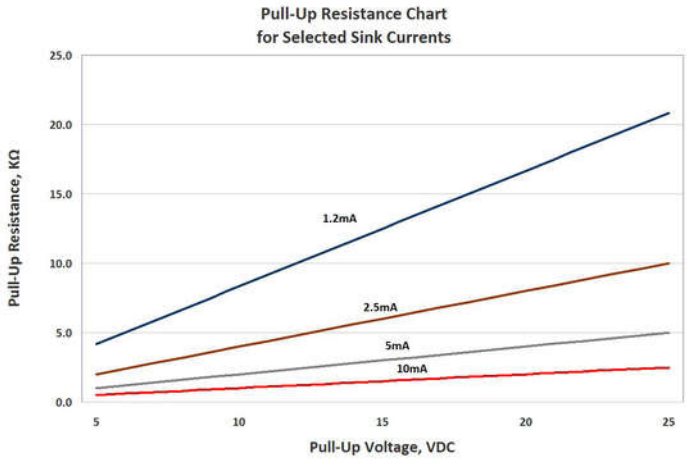

Table 3.1

Recommended Pull-Up Resistor Values			
	Supply Voltage		
Current, I_{sink}	5	12	24
1.2 mA	4.3K	10.0K	20.0K
2.5 mA	2.0K	4.7K	10.0K
5 mA	1.0K	2.4K	4.7K
10 mA	510Ω	1.2K	2.4K

I_{sink} is application dependent. It is recommended to use the lowest possible sink current when selecting a pull-up resistor.

Theoretical Pull-Up Resistor Calculation: $R_{pullup} = \frac{V_{supply}}{I_{sink}}$

Resistance values based on closest standard 5% resistor values

Absolute Maximum I_{sink} = 20mA

4.7 K pull-up is available as a standard option. If an alternative pull-up value is preferred, contact sales@phoenixamerica.com.

Wiring

FLYING LEADS

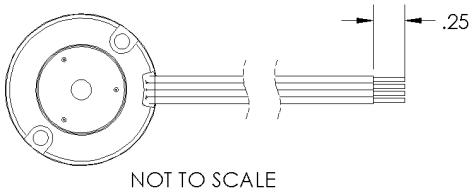

- 26 AWG
- 7x32 Strands, Tinned Copper
- PVC Insulation
- UL Type 1007/1569
- Temperature Rating: 105ºC

CABLE

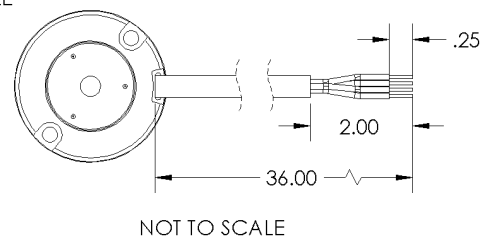

- 26 AWG
- 4 Conductor with Foil Shield and Drain
- Stranded Tinned Copper
- PVC Insulation
- Grey PVC Jacket
- UL Style 2464, CSA
- Temperature Rating: 105ºC

Table 3.2

Standard Wiring			
	Leads	**Cable**	**Connector Pin-Out**
Ch A	Yellow	Brown	1
Ch B	Blue	Orange	2
Gnd	Black	Black	3
Vcc	Red	Red	4

Custom lengths and insulation materials available. Contact sales@phoenixamerica.com.

Phoenix America, INC
4717 Clubview Drive
Fort Wayne, IN 46804

Tel: (888)-801-1422
Local: (260)-432-9664
Fax: (260)-432-9967

www.phoenixamerica.com
sales@phoenixamerica.com
© Copyright PAI 2017 Rev. 8/1/2017

Encoder Physical Outline

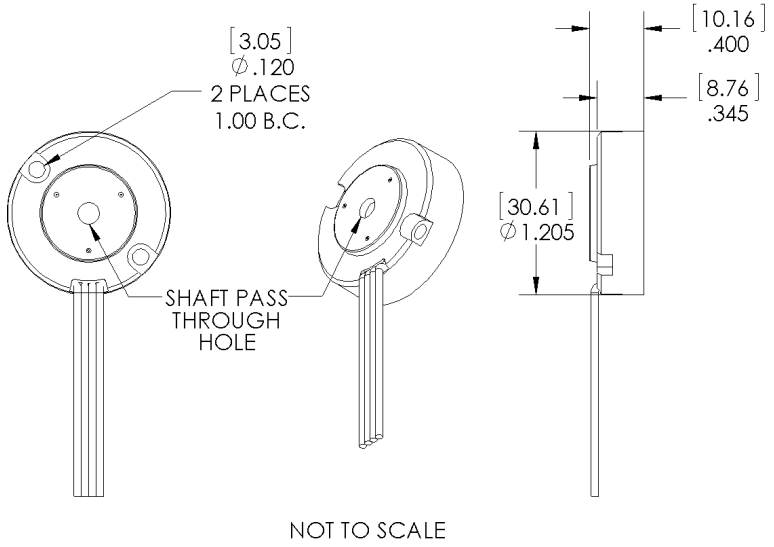

Table 4.1

Motor Shaft Diameter	Shaft Pass Through Hole Size (options/ recommendation)	
-	No Hole	
2 mm	2.06 mm	0.081 in
3 mm	3.06 mm	0.120 in
1/8 in	3.26 mm	0.127 in
5/32 in	4.06 mm	0.160 in
4 mm	4.06 mm	0.160 in
3/16 in	4.83 mm	0.190 in
5 mm	5.06 mm	0.199 in
6 mm	6.06 mm	0.239 in
1/4 in	6.40 mm	0.252 in
7 mm	7.06 mm	0.278 in
5/16 in	8.05 mm	0.317 in
8 mm	8.05 mm	0.317 in
3/8 in	9.59 mm	0.378 in

Other shaft pass through hole sizes available upon request. Contact sales@phoenixamerica.com.

Encoder Mounting Guidelines

Concentricity of the encoder housing to the magnet rotor is critical for optimal encoder performance. Considering the following during the design phase will ensure concentricity and ease of assembly.

- Tight molding tolerances allow for the outside diameter of the encoder to be used to locate the encoder housing concentric to the motor shaft and magnet rotor. A machined pocket on the motor endbell works well for alignment. Recommended pocket is 0.015” to 0.020” deep and 1.215” in diameter.
- Extending the shaft through the optional shaft pass through hole is an easy way to align the encoder housing to the motor shaft and magnet rotor. Simply position the encoder so that the shaft is centered concentrically in the shaft pass through hole.
- If previous two methods of alignment are not used it is recommended that the encoder be fastened to the motor using #5-40 or M3 mounting screws. The slightly larger diameter of the #5-40 and M3 screws will compensate for some of the tolerance allowed when using the standard recommended #4-40 or M2.5 mounting screws.

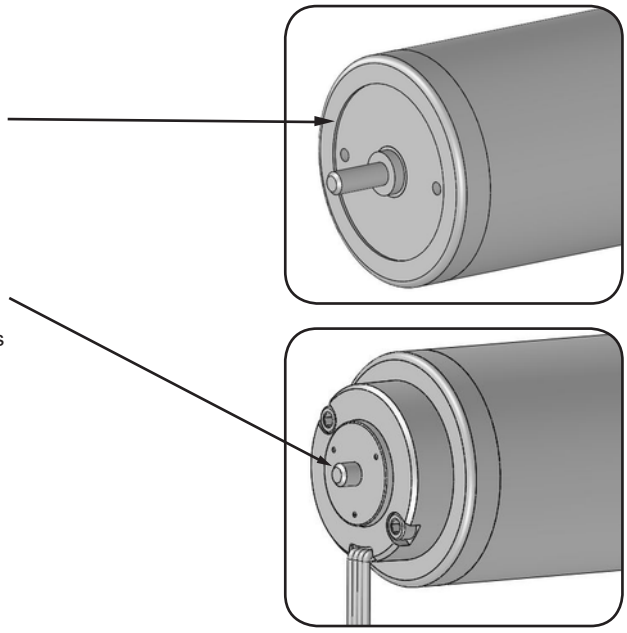

Phoenix America, INC
4717 Clubview Drive
Fort Wayne, IN 46804

Tel: (888)-801-1422
Local: (260)-432-9664
Fax: (260)-432-9967

www.phoenixamerica.com
sales@phoenixamerica.com
© Copyright PAI 2017 Rev. 8/1/2017

Target Rotor Physical Outline - Molded (Mounting Style A)

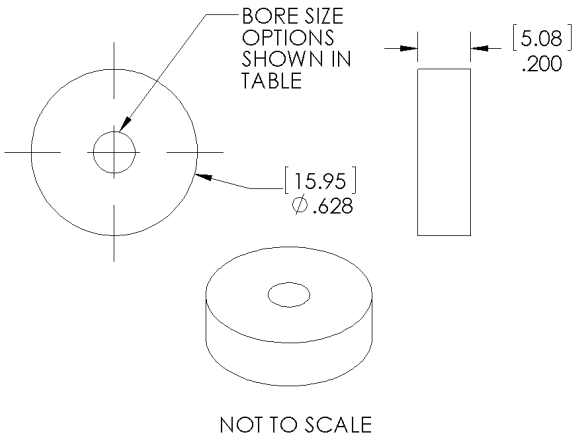

Table 5.1

Bore Size (.inch)	Motor Shaft OD Size (nominal)	NEMA Guide Shaft Tolerance	Magnet Bore MIN. (inch)	Magnet Bore MAX. (inch)
079	2 mm (.0787")	+0.0000"/-0.0005"	.0777	.0807
118	3 mm (.1181")		.1171	.1201
125	1/8 in (.1250")		.1240	.1270
156	5/32 in (.1563")		.1553	.1583
157	4 mm (.1575")		.1565	.1595
188	3/16 in (.1875")		.1865	.1895
197	5 mm (.1969")		.1959	.1989
236	6 mm (.2364")		.2354	.2384
250	1/4 in (.2500")		.2490	.2520
276	7 mm (.2758")		.2747	.2777
313	5/16 in (.3125")		.3115	.3145
315	8 mm (.3150")		.3140	.3170
375	3/8 in (.3750")		.3740	.3770

Other bore sizes available upon request.
Contact sales@phoenixamerica.com.

Target Rotor Mounting Guidelines - Molded (Mounting Style A) For Slip Fit Application

- Proper alignment of the target rotor to the encoder sensing element is critical for optimal encoder performance. Insure that the rotor is mounted to the specified height shown in the diagram below.
- A machined step on the motor shaft provides a quick and repeatable method for positioning the target rotor. Spacers or other fixturing should be used to properly position the rotor if no mechanical locating features are on the shaft.
- Various adhesives can be used to bond the target rotor to the motor shaft. Shaft alloys, operating environment, and shaft speed and acceleration should be taken into consideration when selecting an appropriate bonding agent. Loctite threadlockers and retaining compounds have proved effective in bonding the target rotor to the motor shaft. Loctite 263 and 2760 threadlockers and Loctite 638 and 680 retaining compounds are good candidates. These materials have been effective in past experience; testing under actual operating conditions should be used to qualify any bonding material.
- For best results, the motor shaft should be clean and free of any oils, lubricants, or solvents.
- Apply adhesive around the leading edge of the shaft and inside the hole in the rotor. Use a rotating motion when assembling the magnet to the shaft to insure good adhesive coverage.
- The use of primers and activators can be used to improve bond strength and cure rate.
- For non-critical applications or for fast bonding for evaluation, a cyanoacrylate adhesive (super glue) can be used. Loctite 401 and 410 have proven effective for quick bonding applications.

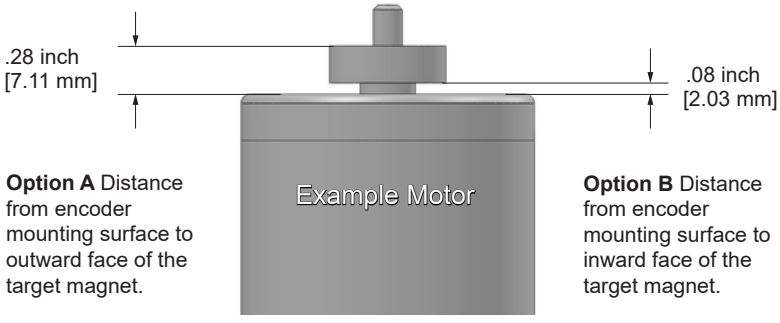

Option A Distance from encoder mounting surface to outward face of the target magnet.

Option B Distance from encoder mounting surface to inward face of the target magnet.

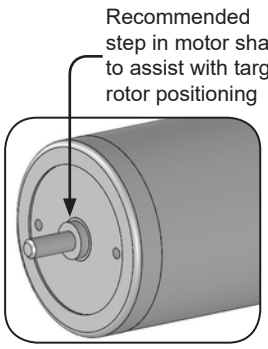

Phoenix America, INC
4717 Clubview Drive
Fort Wayne, IN 46804

Tel: (888)-801-1422
Local: (260)-432-9664
Fax: (260)-432-9967

www.phoenixamerica.com
sales@phoenixamerica.com
© Copyright PAI 2017 Rev. 8/1/2017

Connector Options

Molex Mini-Fit Jr. (Male)

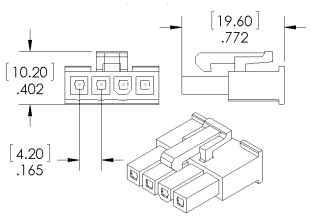

Molex Mini-Fit Jr. (Female)

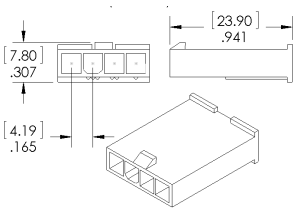

TE AmpModu MTE (Male)

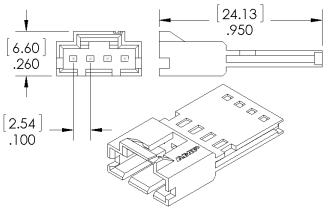

TE AmpModu MTE (Female)

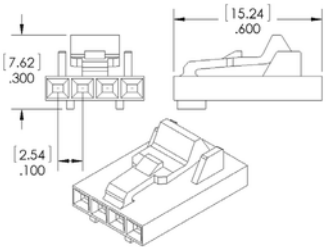

Need a different connector? Contact sales@phoenixamerica.com.

Part Number Description

L4 – 12 – 125 – N – C – N – A – F – B – X

Series	PPR	Bore Size	Index	Output Type	Shaft Pass Through Hole	Target Magnet Mounting	Wiring	Length (Meters)	Connector
L4	**2** **3** **4** **5** **6** **8** **12**	**079** 2 mm **118** 3 mm **125** 1/8 in *(default)* **156** 5/32 in **157** 4 mm **188** 3/16 in **197** 5 mm **236** 6 mm **250** 1/4 in **276** 7 mm **313** 5/16 in **315** 8 mm **375** 3/8 in	**N** *A,B Quadrature (default)*	**C** *Open Collector (default)* **P** *Open Collector with Internal Pull-Up (4.7K)*	**N** *None (default)* **Y** *Size will match bore shown in Table 4.1*	**A** *Molded (default)*	**F** *Flying Leads (default)* **C** *Cable*	**A** .5 *(19.685")* **B** 0.914 *(36") (default)* **C** 1 *(39.370")* **D** 2 *(78.740")*	**X** *None (default)* **A1** *TE AmpModu MTE (Male)* **A2** *TE AmpModu MTE (Female)* **M1** *Molex Mini-Fit Jr. (Male)* **M2** *Molex Mini-Fit Jr. (Female)*

Example: L4-12-125-N-C-N-A-F-B-X

Phoenix America, INC
4717 Clubview Drive
Fort Wayne, IN 46804

Tel: (888)-801-1422
Local: (260)-432-9664
Fax: (260)-432-9967

www.phoenixamerica.com
sales@phoenixamerica.com
© Copyright PAI 2017 Rev. 8/1/2017