E-BOX MODULAR, standard contact module, 250 V, 1 NC + 1 NO



fields of application

- Measurement-control-regulation
- Mechanical and system engineering
- Construction machinery
- Industrial robots
- Model construction
- Home technology

special features

- Compact dimensions: 109 x 40 x 27 mm
- For actuators from the RAFIX 22 FS+ control device series (mounting hole ø 22.3 mm)
- Switching elements with 2 contacts (for emergency stop "PLUS1" with 3 contacts)
- Optionally with LED for illuminated actuators
- With yellow upper housing part for emergency stop actuator
- With gray upper housing part for standard actuators such as pushbuttons
- Fastening with time-saving single-hole screw fastening technology, particularly suitable for aluminum profile rails or alternatively direct fastening with M4 screws
- Includes cable entry for direct cabling: M16 at the side or M20 at the base

description

The elegant and flat E-BOX is the complete housing for RAFIX 22 FS+ control units. It is used where individual control devices are required at remote locations - for example, emergency stop applications along a production facility or at a safety fence. The compact dimensions of the E-BOX are based on the edge dimensions of a 40 mm profile rail. Installation is also designed with this in mind. This is quick and easy thanks to the modular system consisting of a lower and upper housing section, contact module with switching element and emergency stop actuator.

The wiring of the terminals must be carried out by trained specialist personnel.

technical data

general

Operating temperature, min.	-25 °C
Operating temperature, max.	70 °C
Storage temperature, min.	-40 °C
Storage temperature, max.	80 °C
Packaging	Box
Packaging unit	1 pcs.
net weight	7.7 g

direct links

- RAFI eCatalog

The information in this data sheet only contains general descriptions and / or performance features, which may not apply precisely as described to the respective application, and which my change due to further product enhancements. The technical data, illustrations and other information about our products are the mere results of individual technical testing. These descriptions and other product features are only binding if they expressly agreed upon at the time of the conclusion of a binding contract. In all other cases, we reserve the right to make technical changes as well as changes of availability. Pictures and other graphic illustrations are approximations only. All product names may be trademarks or brand names of the RAFI Group or any other sub-supplier of RAFI. The use of such by any third parties for their own purposes may infringe the rights of the respective entity holding those rights.

RAFI GmbH & Co. KG

Ravensburger Str. 128-134
88276 Berg / Ravensburg
Germany
www.rafi-group.com,
info.headquarters@rafi-group.com

Operating life electrical	1,000,000 (1A / 250V AC) cycles 100,000 (2A / 250V AC) cycles 30,000 (4A / 250V AC) cycles
B10 electrical	1.300.000 (1A / 250V AC) cycles 130.000 (2A / 250V AC) cycles 40.000 (4A / 250V AC) cycles
Protection class	II
MOQ order	5 pcs.
RoHS compliant	Yes
REACH compliant	Yes

mounting diameters

Outside dimension, length	45 mm
Outside dimension, width	32 mm
Outside dimension, height	16.85 mm

mechanical data

Contact function	1 NC + 1 NO
Contact system	Bridge contact
Contact material	Silver
Fixing	Assembly clip
PIN 1	Normally open contact 1
PIN 2	Normally open contact 1
PIN 3	Normally closed contact 1
PIN 4	Normally closed contact 1

electrical data

Rated voltage, min.	10 V
Rated voltage, max.	250 V
Voltage type	AC / DC
Rated operating voltage	10-250 V
Operating current, min.	1 mA
Rated current, min.	0.01 A
Power loss	0.96000 W

The information in this data sheet only contains general descriptions and / or performance features, which may not apply precisely as described to the respective application, and which my change due to further product enhancements. The technical data, illustrations and other information about our products are the mere results of individual technical testing. These descriptions and other product features are only binding if they expressly agreed upon at the time of the conclusion of a binding contract. In all other cases, we reserve the right to make technical changes as well as changes of availability. Pictures and other graphic illustrations are approximations only. All product names may be trademarks or brand names of the RAFI Group or any other sub-supplier of RAFI. The use of such by any third parties for their own purposes may infringe the rights of the respective entity holding those rights.

RAFI GmbH & Co. KG

Ravensburger Str. 128-134
88276 Berg / Ravensburg
Germany
www.rafi-group.com,
info.headquarters@rafi-group.com

drawings

System drawing

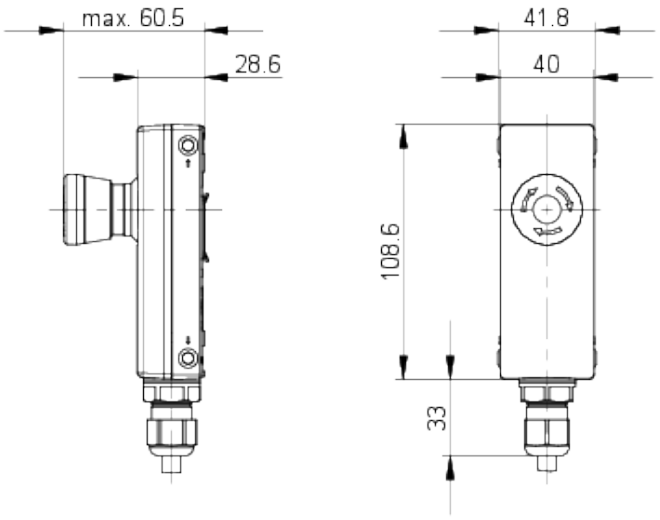

System drawing

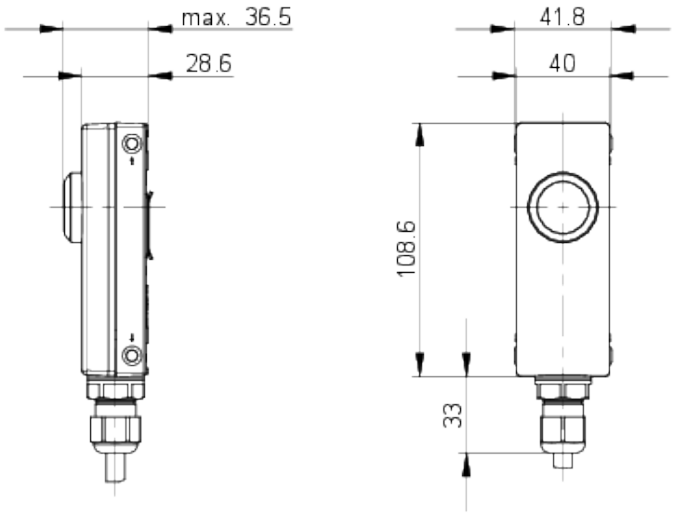

The information in this data sheet only contains general descriptions and / or performance features, which may not apply precisely as described to the respective application, and which my change due to further product enhancements. The technical data, illustrations and other information about our products are the mere results of individual technical testing. These descriptions and other product features are only binding if they expressly agreed upon at the time of the conclusion of a binding contract. In all other cases, we reserve the right to make technical changes as well as changes of availability. Pictures and other graphic illustrations are approximations only. All product names may be trademarks or brand names of the RAFI Group or any other sub-supplier of RAFI. The use of such by any third parties for their own purposes may infringe the rights of the respective entity holding those rights.

RAFI GmbH & Co. KG

Ravensburger Str. 128-134
88276 Berg / Ravensburg
Germany
www.rafi-group.com,
info.headquarters@rafi-group.com

Schematic diagram

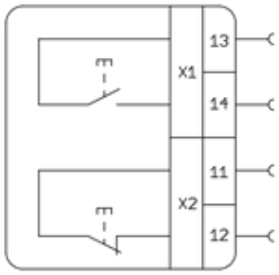

The information in this data sheet only contains general descriptions and / or performance features, which may not apply precisely as described to the respective application, and which my change due to further product enhancements. The technical data, illustrations and other information about our products are the mere results of individual technical testing. These descriptions and other product features are only binding if they expressly agreed upon at the time of the conclusion of a binding contract. In all other cases, we reserve the right to make technical changes as well as changes of availability. Pictures and other graphic illustrations are approximations only. All product names may be trademarks or brand names of the RAFI Group or any other sub-supplier of RAFI. The use of such by any third parties for their own purposes may infringe the rights of the respective entity holding those rights.

RAFI GmbH & Co. KG

Ravensburger Str. 128-134
88276 Berg / Ravensburg
Germany
www.rafi-group.com,
info.headquarters@rafi-group.com