O4H501

Diffuse reflection sensor with background suppression

O4H-FPKG/2M

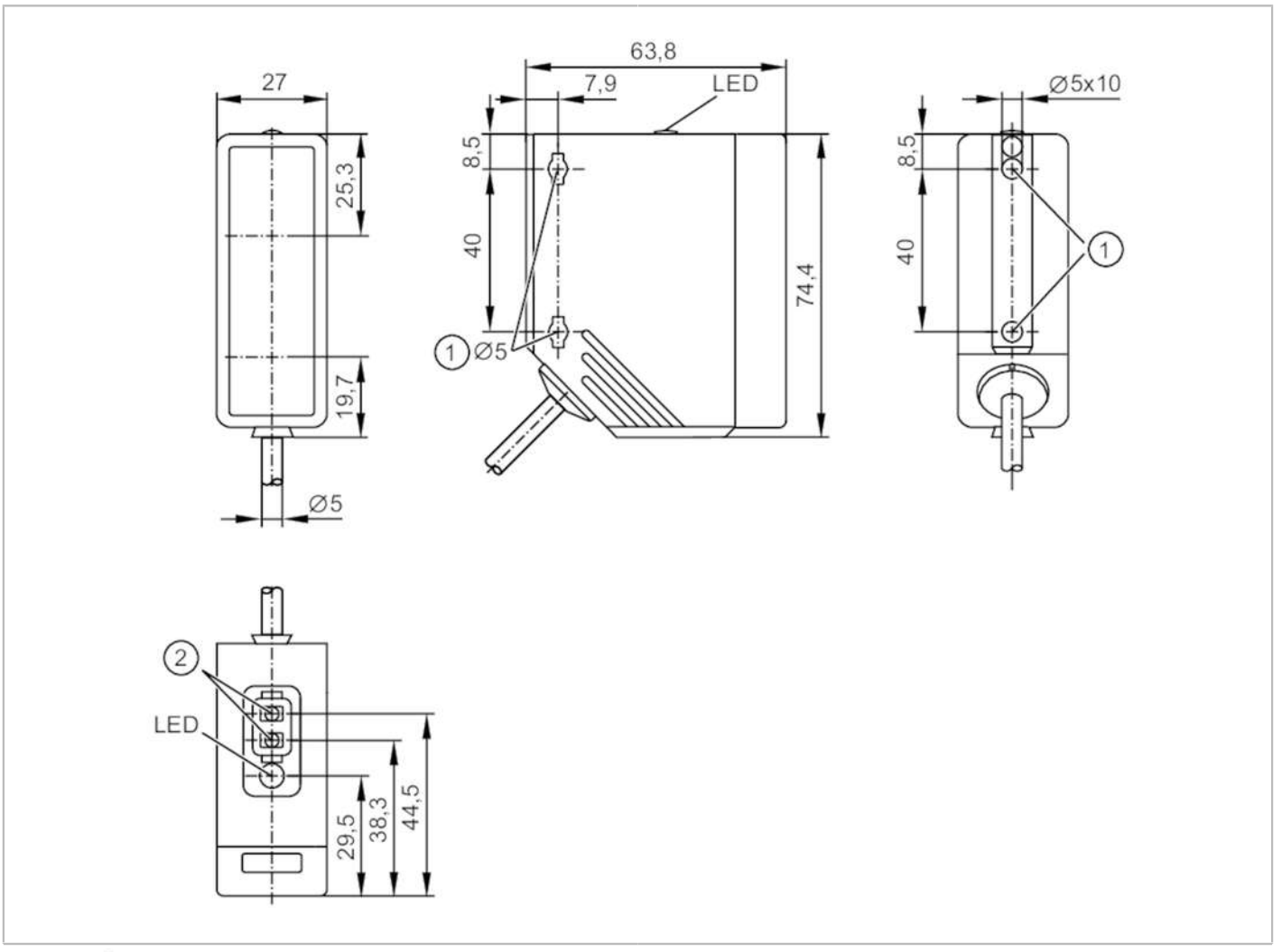

Product characteristics		
Type of light		red light
Housing		rectangular
Application		
Special feature		Background suppression
Function principle		Diffuse reflection sensor
Electrical data		
Operating voltage	[V]	10...36 DC
Current consumption	[mA]	25
Protection class		II
Reverse polarity protection		yes
Type of light		red light
Wave length	[nm]	624
Outputs		
Electrical design		PNP
Output function		light-on/dark-on mode; (programmable)

O4H501

Diffuse reflection sensor with background suppression

O4H-FPKG/2M

Max. voltage drop switching output DC [V]		2.5
Permanent current rating of switching output DC [mA]		200
Switching frequency DC [Hz]		1000
Short-circuit protection		yes
Type of short-circuit protection		pulsed
Overload protection		yes
Detection zone		
Range [mm]		100...2600; (white paper 200 x 200 mm 90% remission)
Range on white object (90 % remission) [mm]		100...2600
Range on grey object (18 % remission) [mm]		100...1300
Range on black object (6 % remission) [mm]		100...900
Range adjustable		yes
Max. light spot diameter [mm]		50
Light spot dimensions refer to		Range
Background suppression available		yes
Operating conditions		
Ambient temperature [°C]		-25...60
Protection		IP 67
Tests / approvals		
EMC	EN 60947-5-2	
MTTF [years]		355
Mechanical data		
Weight [g]		209
Housing		rectangular
Dimensions [mm]		74.4 x 27 x 63.8
Materials		housing: PA; bezel: stainless steel; operator interface: TPE
Lens material		PMMA
Lens alignment		side lens
Displays / operating elements		
Display	switching status	1 x LED, yellow
Teach function		yes
Electronic lock		yes
Remarks		
Remarks		operating voltage "supply class 2" according to cULus
Pack quantity		1 pcs.

O4H501

Diffuse reflection sensor with background suppression

O4H-FPKG/2M

Electrical connection

Cable: 2 m, PUR; 3 x 0.34 mm²

Connection

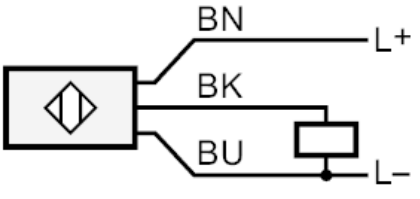

	Core colours :
BK =	black
BN =	brown
BU =	blue

Diagrams and graphs

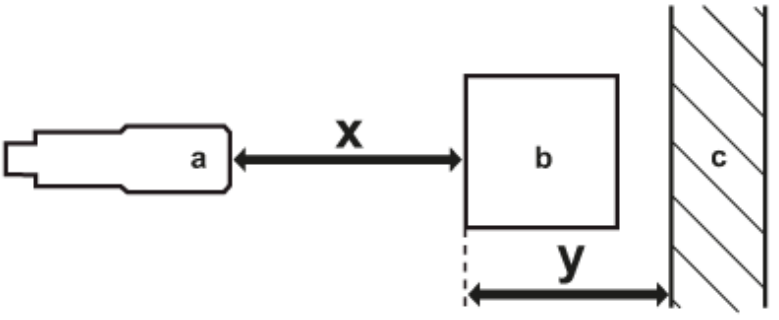

a: sensor
b: object
c: background
x: distance sensor/object [mm]
y: min. distance object/background [mm]

O4H501

Diffuse reflection sensor with background suppression

O4H-FPKG/2M

accuracy graph

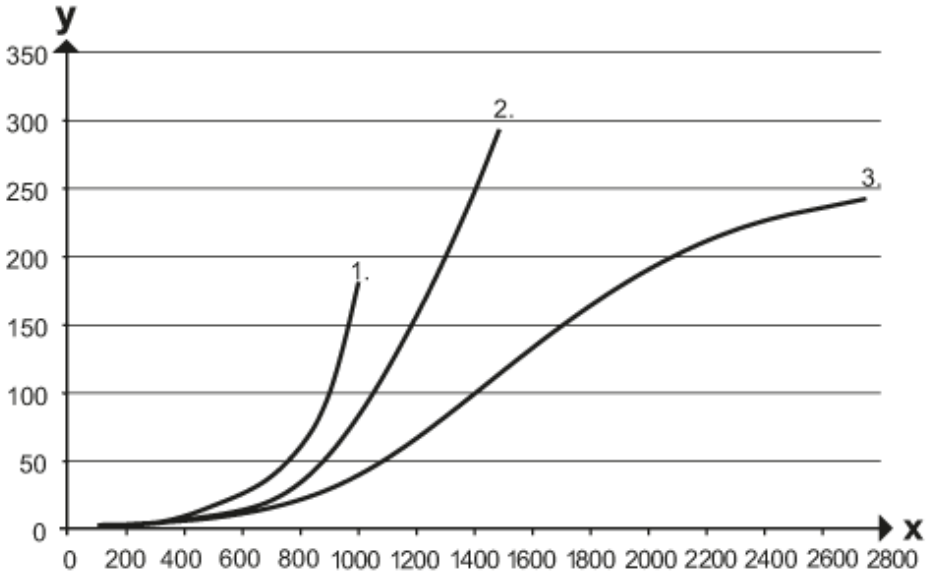

x: distance sensor/object [mm]

y: min. distance object/background [mm]

1 = object black (6 % remission) , background white (90 % remission)

2 = object grey (18 % remission) , background white (90 % remission)

3 = object white (90 % remission) , background white (90 % remission)