Distributor, Series 651

G651AD002CA0000

General series information
Series 651

- The AVENTICS Series 651 is an easy-to-install line of pneumatic filters, regulators and lubricators (FRLs) that offer the industry´s highest flow rates and widest temperature ratings. Available in 1/8-inch, and 1/4-inch port sizes, these FRLs are ideal for automotive and tire, packaging, food and beverage, and process applications requiring highly reliable operation and robust, modern-looking equipment.



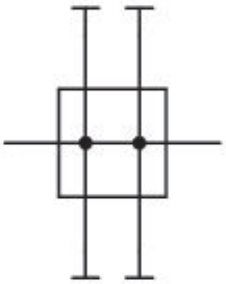

Technical data

Industry	Industrial
Parts	Distributor
Port	G 1/4
Certificates	ATEX optional
Working pressure min.	0 bar
Working pressure max	16 bar
Min. ambient temperature	-40 °C
Max. ambient temperature	80 °C
Medium	Compressed air Neutral gases
Weight	0.19 kg
Housing material	Aluminum

Seal material	Nitrile butadiene rubber G651AD002CA0000

Technical information

The pressure dew point must be at least 15 °C less than ambient and medium temperature and may not exceed 3 °C.

The oil content of compressed air must remain constant during the life cycle.

Use only the approved oils from AVENTICS. Further information can be found in the “Technical information” document (available in https://www.emerson.com/en-us/support).

Dimensions

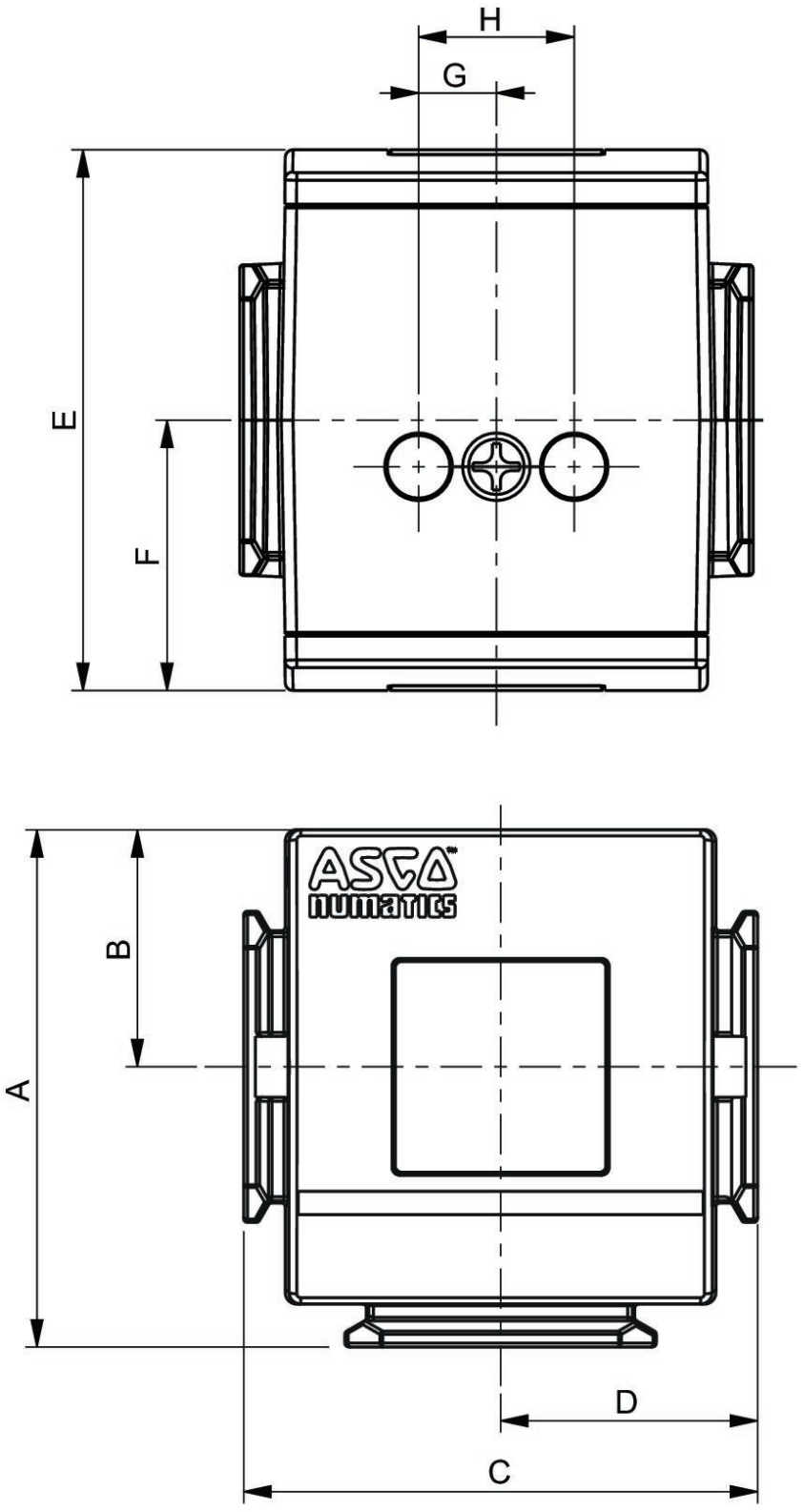

Series	651
A	54,4
B	25
C	50
D	25
E	58
F	29
G	10
H	20

Ordering information

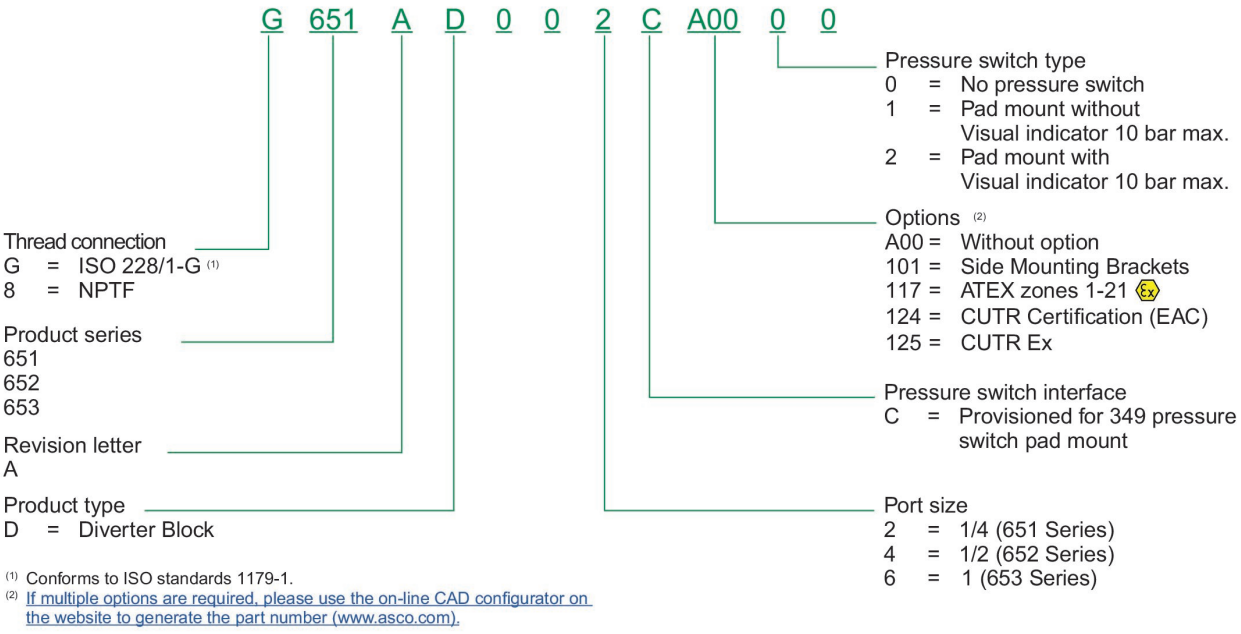

(1) Conforms to ISO standards 1179-1.
(2) If multiple options are required, please use the on-line CAD configurator on the website to generate the part number (www.asco.com).

Ordering information

G	Thread connection	G	ISO 228/1-G
8	NPTF		
651	Product series	651	
652			
653			
A	Revision letter	A	

G	Thread connection	G	ISO 228/1-G
D	Product type	D	Diverter block
0			
0			
2	Port size	2	1/4
4	1/2		
6	1		
C	Pressure switch interface	C	Provisioned for 349 pressure switch pad mount
A00	Options	A00	without option
101	side mounting brackets		
117	ATEX zones 1-21		
124	CURT Certification (EAC)		
125	CURT Ex		
0	Pressure switch type	0	no pressure switch
1	pad mount without visual indicator 10 bar max.		
2	pad mount with visual indicator 10 bar max.		