Requirement class IIIC, EN 574
P2HZ X1



Two-hand control unit for press controllers and safety circuits

Approvals

	P2HZ X1
BG-PRÜFZERT	◆
CCC	◆
c UL us LISTED	◆

Unit features

- Positive-guided relay outputs:
  - 3 safety contacts (N/O), instantaneous
  - 1 auxiliary contact (N/C), instantaneous
- 2 semiconductor outputs
- Connection options for:
  - 2 operator elements (buttons)
- LED indicator for:
  - Switch status channel 1/2
  - Supply voltage
- See order reference for unit types

Unit Description

The two-hand control relay meets the requirements of EN 574 Type IIIC. It forces the operator to keep his hands outside the danger zone area during the hazardous movement. The unit is suitable for use on controllers for metalworking presses as a component for simultaneous switching.
It can be used in applications with

- Mechanical presses (EN 692)
- Hydraulic presses (EN 693)
- Safety circuits in accordance with EN 60204-1

Safety features

The two-hand control relay meets the following safety requirements:

- The circuit is redundant with built-in self-monitoring
- The safety function remains effective in the case of a component failure
- The circuit prevents a further press stroke in the case of:
  - Relay failure
  - Contact welding
  - Coil defect on a relay
  - Open circuit
  - Short circuit

Block diagram

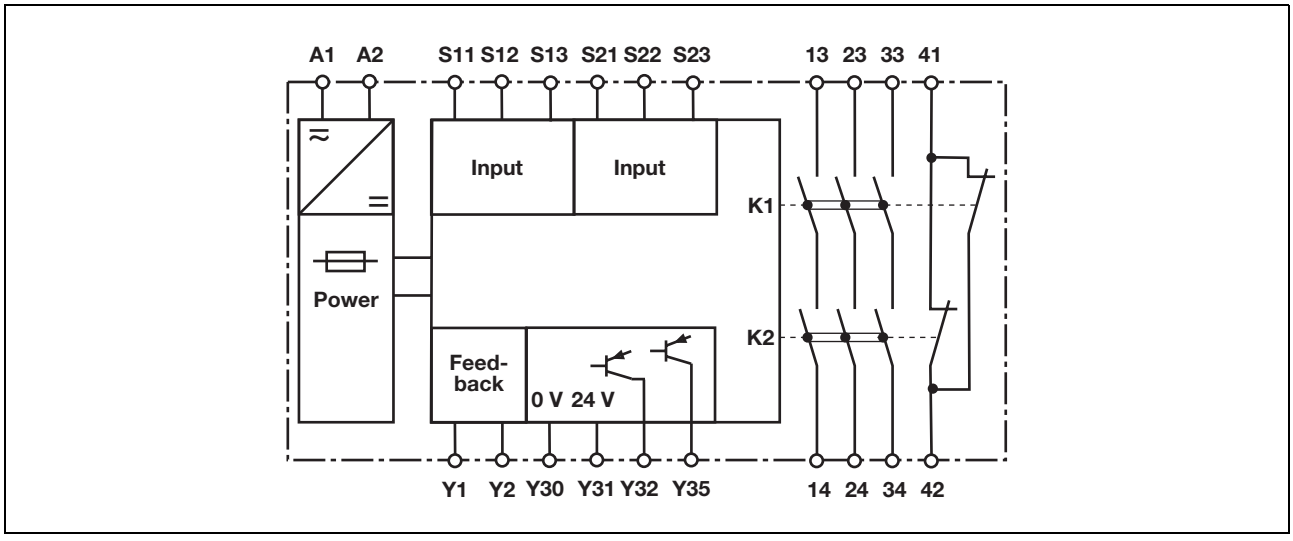

Pilz GmbH & Co. KG, Sichere Automation, Felix-Wankel-Straße 2, 73760 Ostfildern, Germany
Telephone: +49 711 3409-0, Telefax: +49 711 3409-133, E-Mail: pilz.gmbh@pilz.de

Requirement class IIIC, EN 574
P2HZ X1

Function description

- The two-hand control relay must be activated by simultaneously pressing two buttons. If one or both of the buttons are released, the unit interrupts the control command for the hazardous movement.
- Reactivation: The output relays will not re-energise until both operator elements have been released and then re-operated simultaneously.

Timing diagram

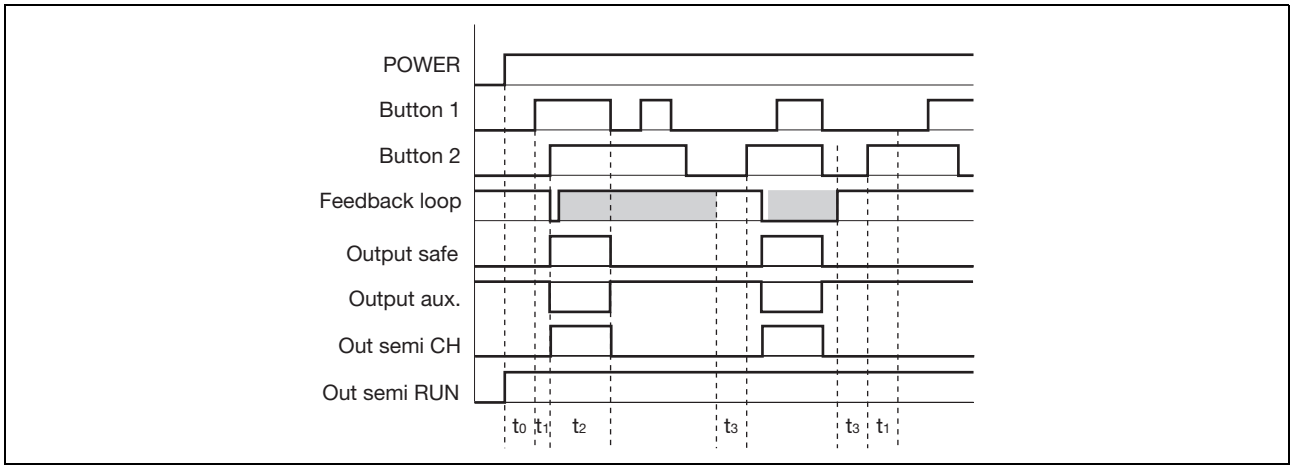

Key

- POWER: Supply voltage
- Button 1/Button 2: Input circuits S11-S12-S13, S21-S22-S23
- Feedback loop: Feedback loop Y1-Y2
- Output safe: Safety outputs 13-14, 23-24, 33-34
- Output aux: Auxiliary contacts 41-42
- Out semi RUN: Semiconductor output for operational readiness Y35
- Out semi CH: Semiconductor output switch status Y32
- t_0: Recovery time after power on
- t_1: Simultaneity, channel 1 and 2
- t_2: Operating cycle ended through button 1 or 2
- t_3: Y1-Y2 must be closed before before the button is operated (recovery time)

Shaded area: Status irrelevant

Wiring

Please note:

- Information given in the “Technical details” must be followed.
- Outputs 13-14, 23-24, 33-34 are safety contacts, output 41-42 is an auxiliary contact (e.g. for display).
- To prevent contact welding, a fuse should be connected before the output contacts (see technical details).
- Calculation of the max. cable runs l_{max} in the input circuit:

$$l_{max} = \frac{R_{lmax}}{R_l / km}$$

R_{lmax} = max. overall cable resistance (see technical details)
R_l / km = cable resistance/km

- Use copper wire that can withstand 60/75 °C.
- Sufficient fuse protection must be provided on all output contacts with capacitive and inductive loads.

Pilz GmbH & Co. KG, Sichere Automation, Felix-Wankel-Straße 2, 73760 Ostfildern, Germany
Telephone: +49 711 3409-0, Telefax: +49 711 3409-133, E-Mail: pilz.gmbh@pilz.de

Requirement class IIIC, EN 574
P2HZ X1

Preparing for operation

▸ Supply voltage

Supply voltage	AC	DC
	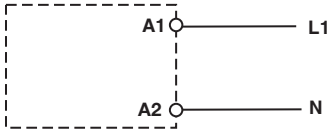	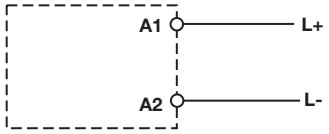

▸ Input circuit

Input circuit	Single-channel	Dual-channel
Two-hand button **with** detection of shorts across contacts	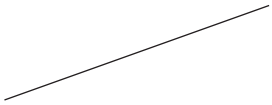	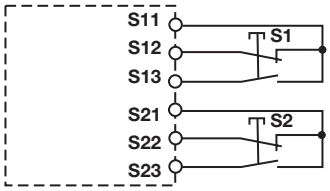

▸ Feedback loop

Feedback loop	
Contacts from external contactors	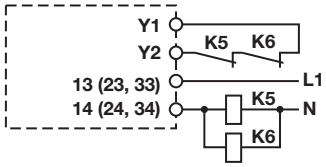

▸ Semiconductor output

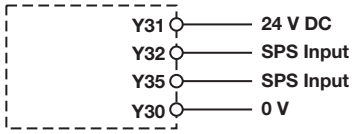

▸ Key

S1/S2	Two-hand button

Pilz GmbH & Co. KG, Sichere Automation, Felix-Wankel-Straße 2, 73760 Ostfildern, Germany
Telephone: +49 711 3409-0, Telefax: +49 711 3409-133, E-Mail: pilz.gmbh@pilz.de

Requirement class IIIC, EN 574
P2HZ X1

Terminal configuration

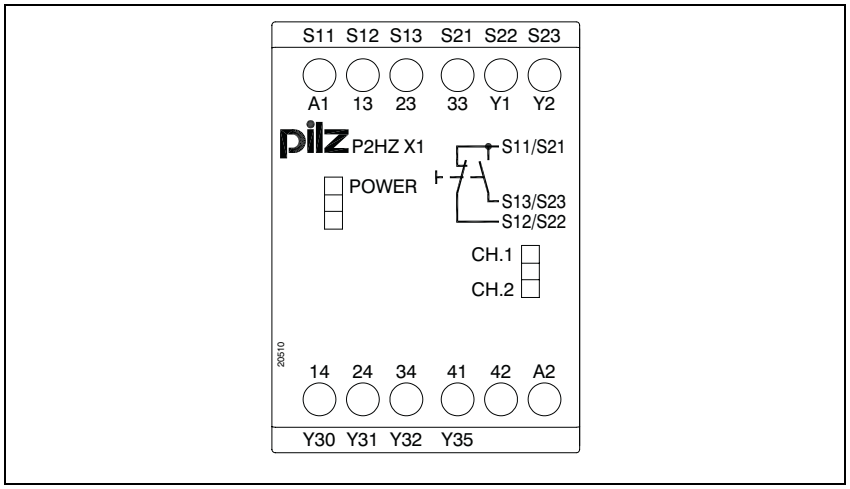

Installation

- The safety relay should be installed in a control cabinet with a protection type of at least IP54.
- Use the notch on the rear of the unit to attach it to a DIN rail.
- Ensure the unit is mounted securely on a vertical DIN rail (35 mm) by using a fixing element (e.g. retaining bracket or an end angle).

Notice
The distance of the button connected to the two-hand relay from the nearest danger zone must be large enough that if one of the buttons is released, the dangerous moment is interrupted before the operator can reach into the danger zone (see EN 999 “The positioning of protective equipment in respect of approach speeds of parts of the human body”).

Dimensions

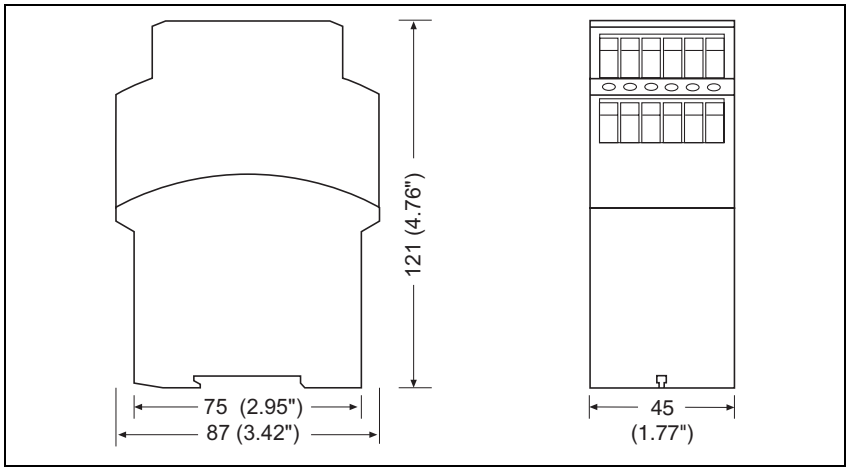

Pilz GmbH & Co. KG, Sichere Automation, Felix-Wankel-Straße 2, 73760 Ostfildern, Germany
Telephone: +49 711 3409-0, Telefax: +49 711 3409-133, E-Mail: pilz.gmbh@pilz.de

Requirement class IIIC, EN 574
P2HZ X1

Notice

This data sheet is only intended for use during configuration. For installation and operation, please refer to the operating instructions supplied with the unit.

Service life graph

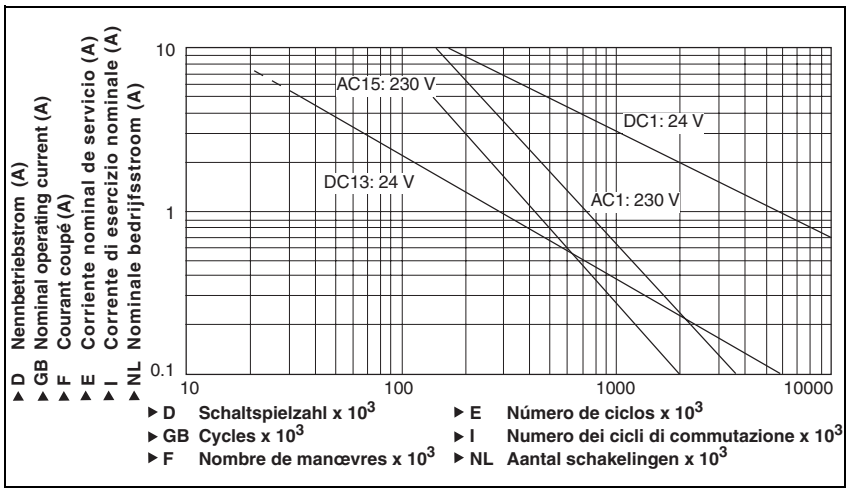

Technical details

Electrical data	
Supply voltage U_B AC	**24 V, 42 V, 48 V, 110 V, 115 V, 120 V, 230 V, 240 V**
Supply voltage U_B DC	**24 V, 26 V**
Voltage tolerance	**-15 % / +10 %**
Power consumption at U_B AC	**6.0 VA**
Power consumption at U_B DC	**2.5 W**
Frequency range AC	**50 - 60 Hz**
Residual ripple DC	**10 %**
Voltage and current at input circuit: **24 V**DC	
N/O contact	**30 mA**
N/C contact	**20 mA**
feedback loop: **24 V**DC	**45 mA**
Output contacts in accordance with **EN 954-1**, Category **4**	Safety contacts (N/O): **3** Auxiliary contacts (N/C): **1**
Utilisation category of safety contacts in accordance with **EN 60947-4-1**	
AC1: **240 V**	I_{min}: **0.01 A**, I_{max}: **5.0 A** P_{max}: **1250 VA**
DC1: **24 V**	I_{min}: **0.01 A**, I_{max}: **5.0 A** P_{max}: **125 W**
Utilisation category of safety contacts in accordance with **EN 60947-5-1**	
AC15: **230 V**	I_{max}: **2.5 A**
DC13 (6 cycles/min): **24 V**	I_{max}: **1.5 A**
Utilisation category of auxiliary contact in accordance with **EN 60947-4-1**	
AC1: **240 V**	I_{min}: **0.01 A**, I_{max}: **2.0 A** P_{max}: **500 VA**
DC1: **24 V**	I_{min}: **0.01 A**, I_{max}: **2.0 A** P_{max}: **50 W**
Utilisation category of auxiliary contact in accordance with **EN 60947-5-1**	
AC15: **230 V**	I_{max}: **2.0 A**
DC13 (6 cycles/min): **24 V**	I_{max}: **1.5 A**
Contact material	**$AgSnO_2$ + 0.2 μm Au**

Requirement class IIIC, EN 574
P2HZ X1

Electrical data	
External contact fuse protection for safety contacts (**EN 60947-5-1**)	
Blow-out fuse, quick	**6 A**
Blow-out fuse, slow	**4 A**
Circuit breaker	**4 A**, 24 VAC/DC, characteristic B/C
External contact fuse protection for auxiliary contact (**EN 60947-5-1**)	
Blow-out fuse, quick	**4 A**
Blow-out fuse, slow	**2 A**
Circuit breaker	**2 A**, 24 VAC/DC, characteristic B/C
Semiconductor outputs (short circuit proof)	**24 V** DC, **20 mA**
External supply voltage	**24 V** DC
Voltage tolerance	**-15 % / +10 %**
Max. overall cable resistance R_{lmax} per input circuit	**14 Ohm**
Times	
Delay-on de-energisation (reaction time in accordance with EN 574)	
N/O contact	**15 ms**
N/C contact	**30 ms**
Recovery time	**250 ms**
Simultaneity, channel 1 and 2	Max. **500 ms**
Environmental data	
EMC	**EN 60947-5-1, EN 61000-6-2**
Vibration in accordance with **EN 60068-2-6**	
Frequency	**10 - 55 Hz**
Amplitude	**0.35 mm**
Climatic suitability	**EN 60068-2-78**
Airgap creepage	**VDE 0110-1**
Ambient temperature	**-10 - 55 °C**
Storage temperature	**-25 - 85 °C**
Protection type	
Mounting (e.g. cabinet)	**IP54**
Housing	**IP40**
Terminals	**IP20**
Mechanical data	
Housing material	
Housing	**PPO UL 94 V0**
Front	**ABS UL 94 V0**
Max. cross section of external conductors with screw terminals	
1 core flexible	**0.20 – 4.00 mm²**
2 core, same cross section, flexible:	
with crimp connectors, without insulating sleeve	**0.20 – 2.50 mm²**
without crimp connectors or with TWIN crimp connectors	**0.20 - 2.50 mm²**
Torque setting with screw terminals	**0.60 Nm**
Dimensions (H x W x D)	
with screw terminals	**87.0 mm** x **45.0 mm** x **121.0 mm**
Weight	**380 g** Order no.: 774330, 774331, 774332, 774434, 774435, 774436, 774438, 774439 **285 g** Order no.: 774340, 774341

The standards current on **08/03** apply.

Order reference

Type	Features	Terminals	Order no.
P2HZ X1	24 VAC	Screw terminals	774 330
P2HZ X1	42 VAC	Screw terminals	774 331
P2HZ X1	48 VAC	Screw terminals	774 332
P2HZ X1	110 VAC	Screw terminals	774 434

Pilz GmbH & Co. KG, Sichere Automation, Felix-Wankel-Straße 2, 73760 Ostfildern, Germany
Telephone: +49 711 3409-0, Telefax: +49 711 3409-133, E-Mail: pilz.gmbh@pilz.de

more than automation
safe automation

Requirement class IIIC, EN 574
P2HZ X1

Type	Features		Terminals	Order no.
P2HZ X1	115 VAC		Screw terminals	774 435
P2HZ X1	120 VAC		Screw terminals	774 436
P2HZ X1	230 VAC		Screw terminals	774 438
P2HZ X1	240 VAC		Screw terminals	774 439
P2HZ X1		24 VDC	Screw terminals	774 340
P2HZ X1		26 VDC	Screw terminals	774 341

Pilz GmbH & Co. KG, Sichere Automation, Felix-Wankel-Straße 2, 73760 Ostfildern, Germany
Telephone: +49 711 3409-0, Telefax: +49 711 3409-133, E-Mail: pilz.gmbh@pilz.de