RSC RKC 572-1M
– Connection Cable

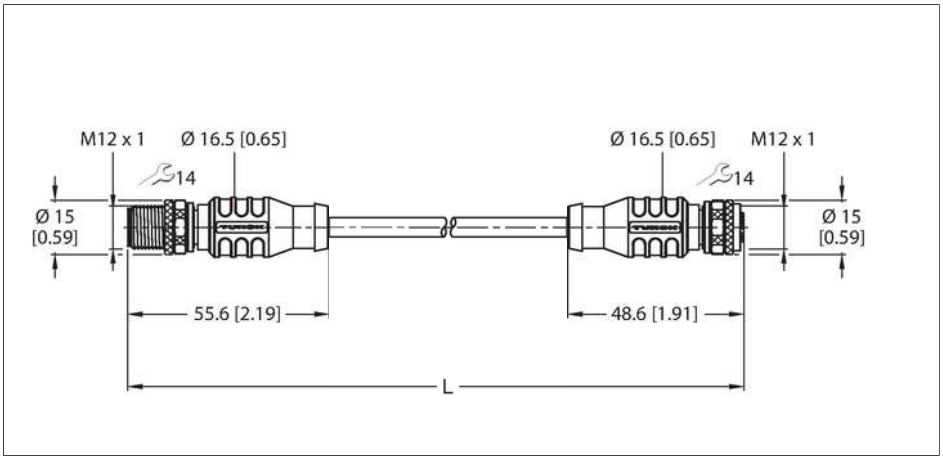

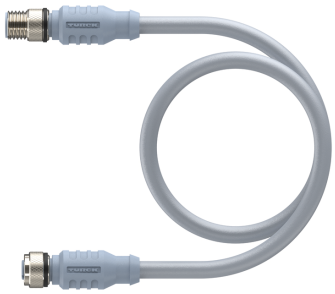

Technical data

Type	RSC RKC 572-1M
ID	U0321
Connector A	Male, M12 × 1, Straight, A-coded
Number of Pins	5
Contacts	Metal, CuZn, Gold-plated
Contact carriers	Plastic, TPU, Blue
Connector body	Plastic, TPU, Blue
Coupling nut/screw	Brass, CuZn, Nickel-plated
Tightening torque (range)	0.8 … 1 Nm (observe max. torque of mating connector!)
Mechanical lifespan	> 100 Mating cycles
Pollution degree	3
Protection class	IP67, Only in screwed condition
Connector B	Female, M12 × 1, Straight, A-coded
Number of pins	5
Contacts	Metal, CuZn, Gold-plated
Contact carriers	Plastic, TPU, Blue
Connector body	Plastic, TPU, Blue
Coupling nut/retaining screw	Brass, CuZn, Nickel-plated
Seal	Plastic, FPM/FKM
Tightening torque	0.8 … 1 Nm (observe max. torque of mating connector!)
Mechanical life	> 100 Mating cycles
Pollution degree	3
Protection class	IP67, Only when screwed together
	NEMA: 1, 3, 4, 6P

Features

- M12 male connector, straight, A-coded
- M12 female connector, straight, A-coded
- Cable length: 1.0 m
- Litzen paarverseilt; geschirmt
- Fieldbus Technology Cable
- Fieldbus type: DeviceNet, PVC jacket, gray, shielded, 2STP × 22 AWG
- UV resistant
- Fire classes: UL 1685 FT4, UL1061, CSA FT4

Cable Cross-Section

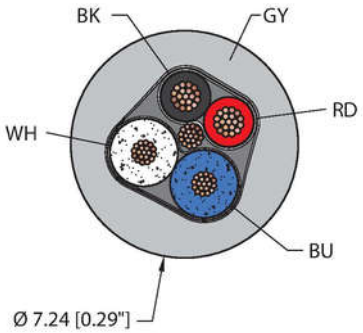

Contact assignment





RSC RKC 572-1M| 12-11-2023 17-39 | Technical modifications reserved

Technical data

Cable	
Cable ID	RF50603
Number of cores	4
Cable diameter	Ø 7.24 mm
Cable length	1 m
Cable jacket	PVC, Gray
Shielding	Foil (IN)
Drain wire cross section	22 AWG, TC (tinned copper)
Conductor material	TC (tinned copper)
Core colors	Power: RD, BK, Data: WH, BU
Subassembly 1	
Description of assembly	STP (shielded twisted pair)
Number of pairs	1
Conductor diameter	0.05 ”
Core insulation	PVC
	Foil (OUT)
Core cross-section	2x22 AWG [Similar to 0.34 mm²]
braid arrangement	19x0.0058 "
Description of assembly	STP (shielded twisted pair)
Number of modules	1
Conductor diameter	0.088 "
Core insulation	Foamed HDPE
Assembly Foil	Foil (OUT)
Core cross-section	2x22 AWG [Similar to 0.34 mm²]
braid arrangement	19x0.0058
Electrical properties at +20 °C	
Rated voltage	250 V
Current	4 A
Mechanical and chemical properties	
Bending radius (stationary installation)	≥ 5 x Ø
Bending radius (flexible use)	≥ 15 x Ø
Ambient temperature range (stationary)	-40…+80 °C
Ambient temperature range (In motion)	5…+80 °C
Ambient temperature during installation	-10…+80 °C
Approval	
Note	
	Using the cable in extreme temperatures, when it is exposed to certain chemicals and above the nominal cycle speed or below the nominal bending radius of the cable can reduce the flexural strength.

Circuit Diagram

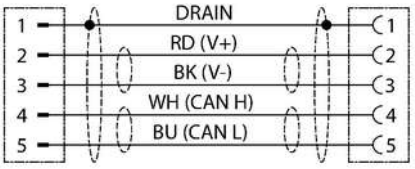

RSC RKC 572-1M| 12-11-2023 17-39 | Technical modifications reserved

Technical data

	- We reserve the right to make technical modifications without prior notice.

RSC RKC 572-1M| 12-11-2023 17-39 | Technical modifications reserved