IN5327

Inductive dual sensor for valve actuators

IND3004DBPKG/US-100-DPV

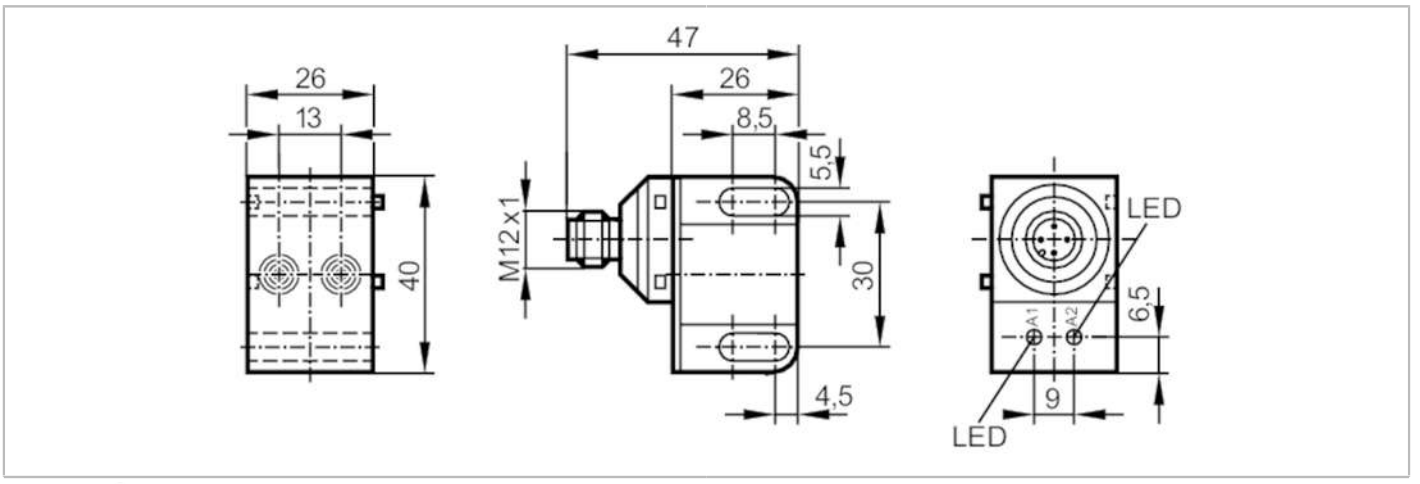

Product characteristics		
Electrical design		PNP
Output function		2 x normally open
Sensing range	[mm]	4
Housing		rectangular
Dimensions	[mm]	40 x 26 x 47
Application		
Special feature		Gold-plated contacts
Electrical data		
Operating voltage	[V]	10...30 DC
Current consumption	[mA]	15; (24 V)
Protection class		II
Reverse polarity protection		yes
Outputs		
Electrical design		PNP
Output function		2 x normally open
Max. voltage drop switching output DC	[V]	2.5
Permanent current rating of switching output DC	[mA]	200
Switching frequency DC	[Hz]	1300
Short-circuit protection		yes
Type of short-circuit protection		pulsed
Overload protection		yes
Detection zone		
Sensing range	[mm]	4
Real sensing range Sr	[mm]	4 ± 10 %
Operating distance	[mm]	0...3.25

IN5327

Inductive dual sensor for valve actuators

IND3004DBPKG/US-100-DPV

Accuracy / deviations			
Correction factor		steel: 1 / stainless steel: 0.7 / brass: 0.4 / aluminium: 0.3 / copper: 0.2	
Hysteresis	[% of Sr]	1...15	
Switch point drift	[% of Sr]	-10...10	
Operating conditions			
Ambient temperature	[°C]	-25...80	
Protection		IP 67	
Tests / approvals			
EMC		EN 60947-5-2	
		EN 55011	class B
MTTF	[years]	1064	
UL approval		Ta	0...40 °C
		Enclosure type	Type 1
		File number UL	E174191
Mechanical data			
Weight	[g]	57	
Housing		rectangular	
Mounting		non-flush mountable	
Dimensions	[mm]	40 x 26 x 47	
Materials		housing: PBT	
Displays / operating elements			
Display		switching status	2 x LED, yellow
Remarks			
Pack quantity		1 pcs.	

Electrical connection - plug

Connector: 1 x M12; coding: A; Moulded body: stainless steel; Contacts: gold-plated



IN5327

Inductive dual sensor for valve actuators

IND3004DBPKG/US-100-DPV

Connection

