# DATASHEET

## FLEXIBLE TOGGLE LATCH 40018 ZI

**DESCRIPTION:**

Miniature toggle latch with a curved 1.5mm diameter wire link which allows wider tolerance of fitting dimensions.
Good flexibility of use
Normal latch to catch fixing center is 31.1mm
Maximum operating tension: 50daN
Suitable for screw fixing using M3 screws, or welding

Supplied with catch.

**FEATURES:**

- Finish: Zinc Plated
- Material: Steel
- Dimensions: 30 x 19.5 x 6.5 mm

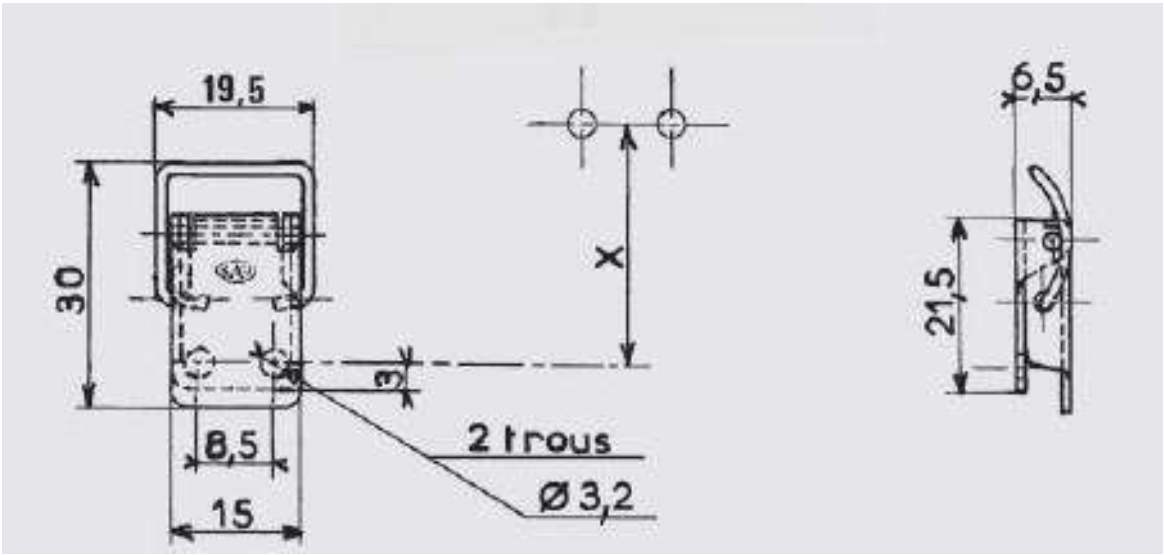

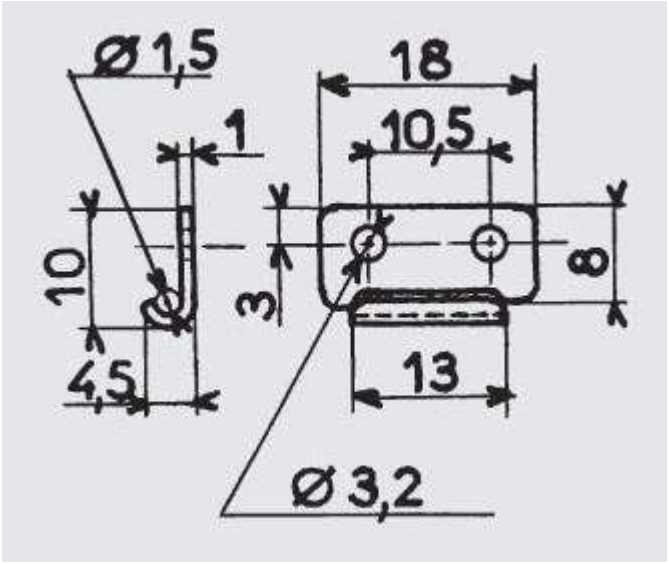
Ø 1,5
18
1
10,5
10
3
8
4,5
13
Ø 3,2