RM SERIES

ASSEMBLY INSTRUCTIONS FOR RM1U, RM2U AND RM3U ENCLOSURES

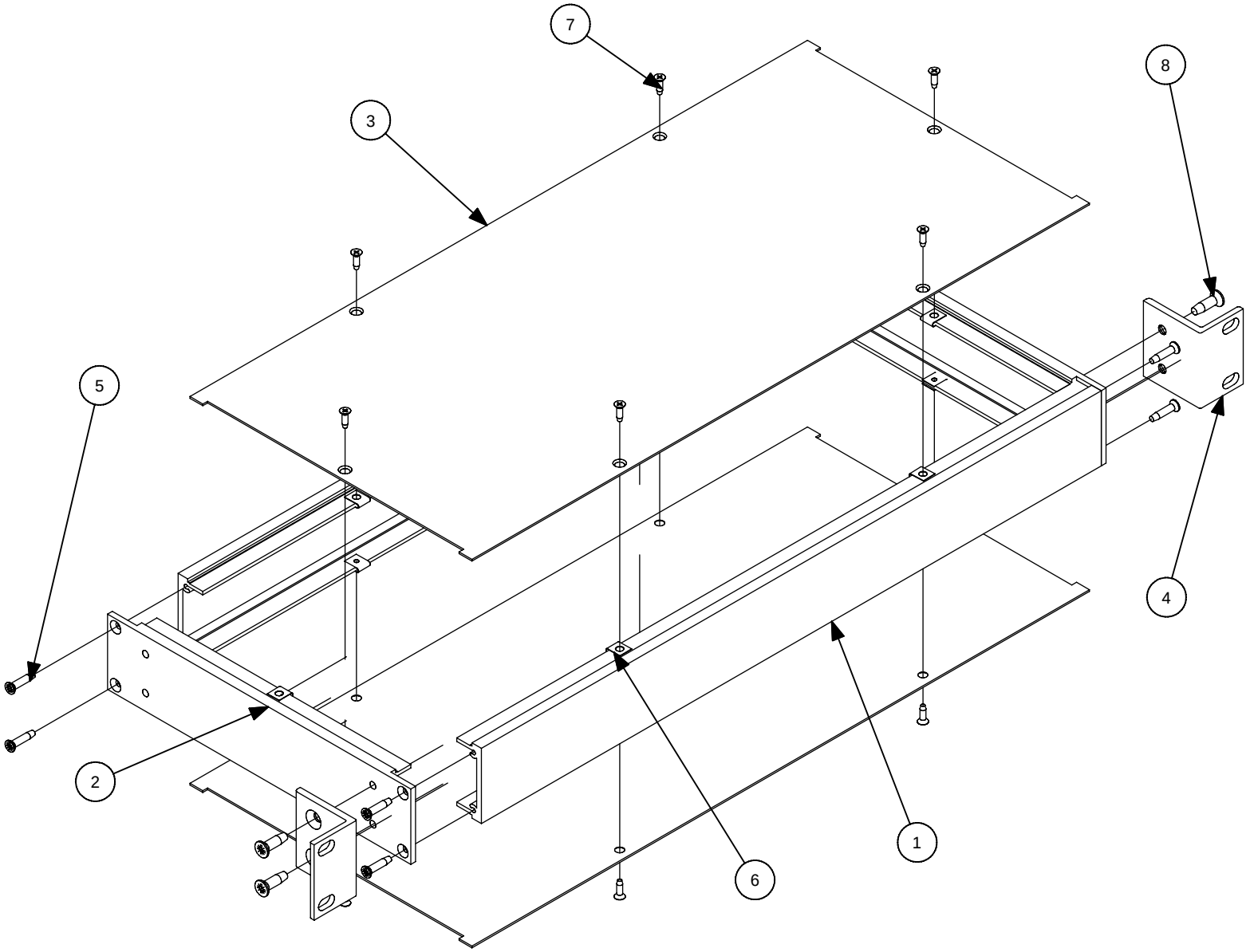

PART#	QTY	DESCRIPTION
1	2	FRONT & REAR PANELS
2	2	SIDE PANELS
3	2	TOP & BOTTOM PLATES
4	2	MOUNTING BRACKETS
5	8	6-32 x 3/8" SELF TAPPING SCREW
6	12 or 16	4-40 SPEED NUTS
7	12 or 16	4-40 x 3/8" MACHINE SCREW
8	4	10-32 x 3/8" MACHINE SCREW
9	4	RUBBER FEET (SELF ADHESIVE)

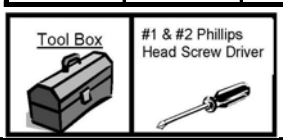

ASSEMBLY INSTRUCTIONS

A) ASSEMBLE THE FRONT & REAR PANELS (PART 1) TO THE SIDE PANELS (PART 2) USING #6 x 3/8" SELF-TAPPING SCREWS (PART 5).

B) SLIDE THE #4 SPEED NUTS (PART 6) OVER THE HOLES ON THE FRONT, REAR, AND SIDE PANEL AS SHOWN.

C) ASSEMBLE THE TOP & BOTTOM PLATES (PART 3) TO THE PANEL FRAME ASSEMBLY THROUGH THE SPEED NUTS USING THE #4 x 3/8" MACHINE SCREWS (PART 7).

D) ADD THE MOUNTING BRACKETS (PART 4) TO THE CASE ASSEMBLY USING THE #10-32 x 3/8" SCREWS (PART 8). *(OPTIONAL)

E) MOUNT THE SELF-ADHESIVE RUBBER FEET (PART 9) ONTO THE DESIRED LOCATIONS. *(OPTIONAL)

HAMMOND ENCLOSURES