Marquardt Verwaltungs-GmbH
Niederlassung Schaffhausen
Ernst Müller-Str. 7
Postfach 952
CH-8201 Schaffhausen
Switzerland

Phone: +41 (52) 644 30 00
Fax: +41 (52) 644 30 60
Net: www.marquardt.ch
E-mail: marquardt@marquardt.ch

Product image / Drawings



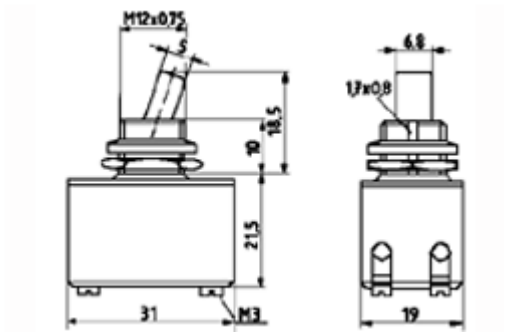

Technical data

Product number	**0145.1220**
Actuator color / printing	
Product family	Toggle switches
Actuation type	direct
Weight	26.720 g
ROHS conform	yes
Switching function	ON / OFF switch (DPST)
Material fixed contact	Ag
Number of poles	2 - pole
connections	Socket terminal, M3
Mechanical life endurance	5E4
Rating IEC	6 (4) A 250 V AC 4 A 250 V DC 5E4
Rating North America	10 A 125 V AC-DC 6 A 250 V AC-DC
Actuators and additional actuators	lever: PA, black with red point
Housing description	bracket plate: Duroplast (base) / chromated galvanized steel (bracket plate), with labelling 0 intermediate plate: PA, black base plate: natural threaded socket: CnZn nickel-plated, without knurled nut with round nut
Connection surface	bearing connection chromated external connection chromated
Contact material	Ag
Rating Code UL	R 45
Contact type	jump contact (knife contact)

Contact type	jump contact (knife contact)
Approval marks	CSA / ENEC 05 / UL
Suitable for appliances of protection class	II
Additional labeling	year/week of manuf. acc. to DIN EN 60062
Type of fastening	central fastening M12 x 0.75
Stock version	●