3 Standard enclosures

Three standard enclosures and a wide variety of accessories, combined with switch and lamp modules, result in a system which offers you maximum flexibility. Cable glands provide simple and internationally compatible means of entry. **ComEx** enclosures are made of impact resistance plastic. A special, moulded, seamless seal guarantees lasting IP 66 and IP 67 rating, even if the cover is frequently opened.



Dimensions for mounting	
Single gang version	73 x 50
Double gang version	73 x 93
Triple gang version	73 x 136

ComEx ...
innovative system solutions
... from BARTEC

Lamp Lens

Explosion protection	EEx e II
Test certificate	PTB Nr. Ex-95.D.3159 U
Impact strength	≥ 7 Nm
Material	Thermoplastic
Gaskets	EPDM
Type of protection	IP 66/67

Identity number
red **LR**
green **LG**
yellow **LY**
white **LW**
blue **LB**

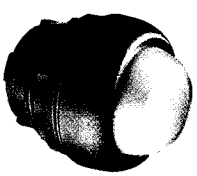

Lamp Module

Explosion protection	EEx me II
Test certificate	PTB Nr. Ex-95.D.2211 U
Rated voltage	AC 24 V, 48 V, 110 V, 230 V DC 24 V, 48 V
Lamp	multi-LED's
Electrical life expectancy	10^5 hours illuminated

Identity number
red **R**
green **G**
yellow **Y**
white **W**
blue **B**

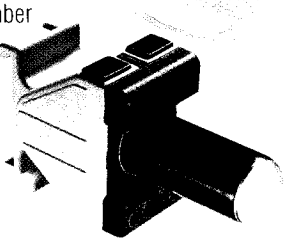

Easy to install

The **ComEx** range is simplicity itself to install. The low side walls of the enclosure make the connection terminals accessible and easy to wire. The PE conductor connections are also arranged for easy connection and offer a high degree of safety. Electrical connection is established via an M20 x 1.5 threaded entry or cable glands. The enclosures can be mounted without removing the cover and can be joined to one another using one screw. Moulded location points on the faces of the enclosures ensure they are aligned and that the final assembly is rigid.

ComEx ...
the easy-installation solution
... from BARTEC

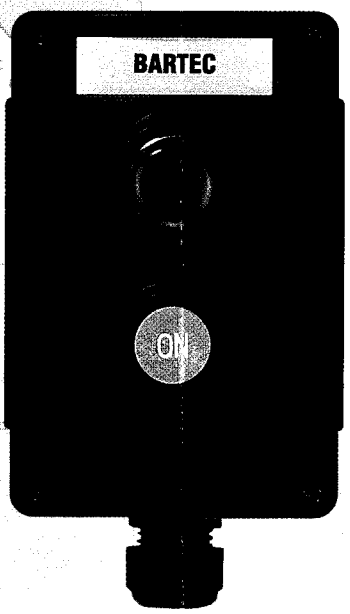

Switch Actuators

Explosion protection	EEx e II
Test certificate	PTB Nr. Ex-95.D.3159 U
Impact strength	≥ 7 Nm
Material	Thermoplastic
Gaskets	EPDM
Type of protection	IP 66/67

Pushbutton
with rubber membrane,
supplied with four labels:
red, green, yellow, white
Identity number **P7**



Selector switch
3 positions I-0-II, black

I + II latching	Identity number **S0**
I + II spring return	Identity number **S1**
I latching, II spring return	Identity number **S2**
I latching, II spring return	Identity number **S3**

2 positions 0-I
latching,
black
Identity number **S9**

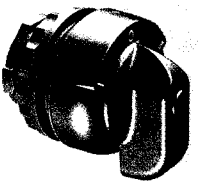

Solutions tailored to customers' requirements

BARTEC has solutions to meet your own individual requirements. Metal cable glands with integrated metal earth plates for armoured cables, M25 bushings or two bushings for connection enclosures and linking connection cables provide a high degree of flexibility in both project planning and installation.

ComEx ...
the best solution for your application
... from BARTEC



Elegant control elements

A choice of eleven different switch actuators and five different lamp lenses are available to meet your requirements. The switch and lamp modules are extremely versatile and simple to install.
16 A switching capacity and connection voltage of 24 V/48 V/110 V/230 V AC or 24 V/48 V DC with only one lamp module guarantees easy project planning and greater flexibility for installation. These modules can be snapped on to their mounting rails quickly and easily.

ComEx ...
top of the range control elements
... from BARTEC

Keyswitch
lockable in both positions, key retractable in both positions,
lock 4 A 185
Identity number **K0**

lockable in the depressed position, key retractable in the depressed position,
lock 4 A 185
Identity number **K1**

lockable in the initial position, key retractable in the initial position,
lock 4 A 185
Identity number **K2**

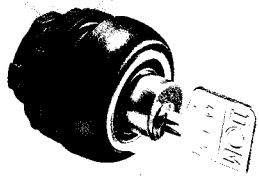

Emergency Stop
pushbutton marked
'NOT-AUS EMERGENCY STOP'
Identity number **N8**

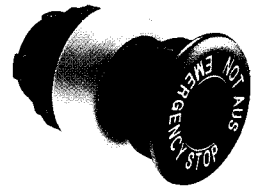

Technical data

Explosion protection
EEx e d m II C T6

Test certificate
PTB No. Ex-97.D.3127

IP rating
IP 66 / IP 67

Connection
Terminals 2.5 mm²

PE conductor terminals
4 x 2.5 mm

Cable entry
M 20 x 1,5
for cable diameter 6 ... 12 mm

Permissible ambient temperature
- 20 °C ... + 40 °C

Enclosure material
Thermoplastic

For dimensions see drawings on reverse of this brochure.

Order data

Control stations	**single gang**	**07-3511-10**	☐☐☐
Control stations	**double gang**	**07-3512-10**	☐☐☐ ☐☐☐
Control stations	**double gang with meter**	**07-3512-10**	☐☐☐
Control stations	**triple gang**	**07-3513-10**	☐☐☐ ☐☐☐ ☐☐☐
Control stations	**triple gang with meter**	**07-3513-10**	☐☐☐ ☐☐☐

Please fill in code:

☐☐ Switch actuator or lamp lens

☐ Switch or lamp module

☐☐☐ Meter

Switch Module

Explosion protection	EEx de IIC
Test certificate	PTB Nr. Ex-95.D.1035 U
Rated insulation voltage	300 V
Rated current I_{the}	16 A / + 40 °C, 11A / + 60 °C
1 n/c, 1 n/o	Identity number **4**
2 n/c	Identity number **1**
2 n/o	Identity number **2**

Meter

Direct measuring mechanisms, mechanisms for connection to current transformer plus a wide selection of scales are available. The meter can be installed in a double or triple gang enclosure.

1 A	Identity number **MM 1**
5 A	Identity number **MM 5**

Mushroom Pushbutton
black

Identity number **P8**

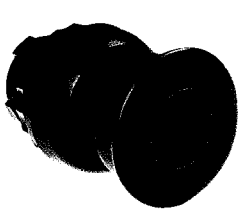

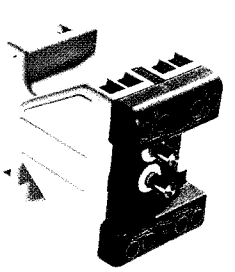

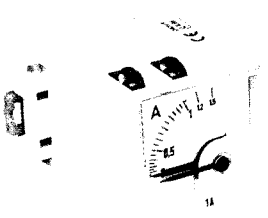

Dimensioned drawings

Single gang version

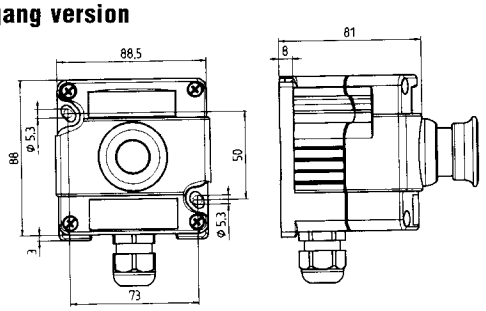

Double gang version

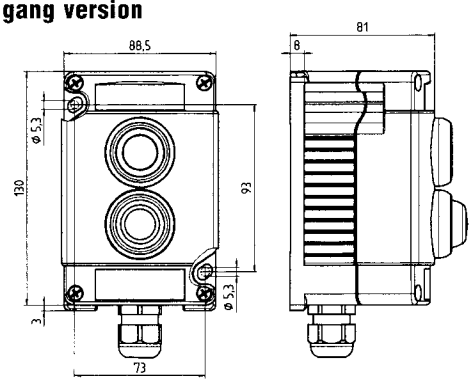

Triple gang version

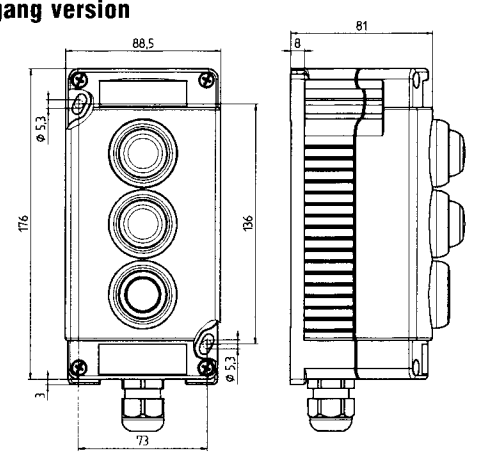

Meter with control switch

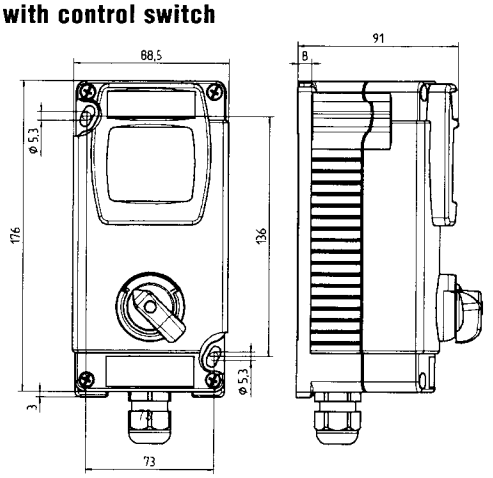

Operator

Pushbutton

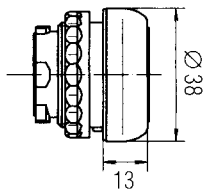

Selector switch

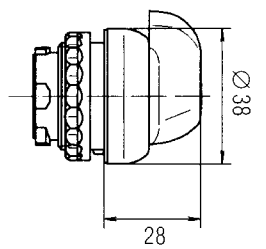

Emergency Stop
Mushroom Pushbutton, black

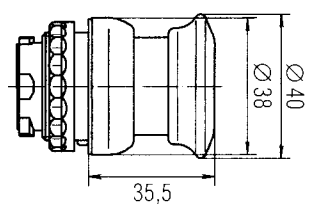

Keyswitch

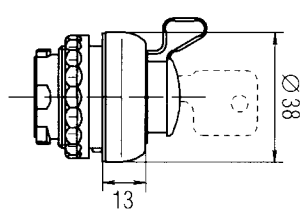

Lamp Lens

