Brand of NTN corporation

Technical data

USPP202

Bearing units



Sheet metal housing, radial insert ball bearing with socket set screws, single lip seal

KIT CONTENT

US.202.G2, PP203

VISUAL (S)

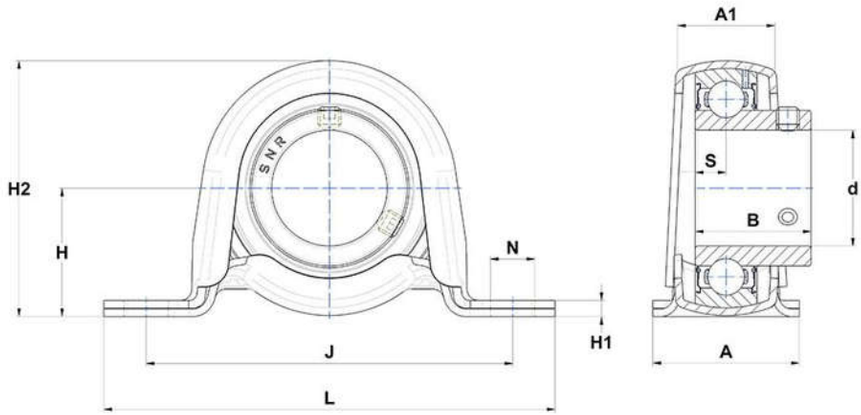

PRODUCT DEFINITION

Brand	SNR
A - Housing width	25,4 mm
A1 - Housing top width	15,9 mm
B - Width of Inner Ring	22 mm
d - Shaft diameter	15 mm
H - Distance mounting base to centerline spheric. seating diam.	22,2 mm

PRODUCT DEFINITION	
H1 - Housing foot height	2,4 mm
H2 - Housing height	43,2 mm
J - Mounting holes distance	68 mm
L - Housing length	85,7 mm
N - Mounting hole dimension	9 mm
S - Distance front side/bearing centre	6 mm

PRODUCT PERFORMANCE	
C - Dynamic load rating	9550000 mN
C0 - Static load rating	4780000 mN
Operating temperature min.	253,15 °K
Operating temperature max.	373,15 °K

OTHER FEATURES	
Mass	0,14 kg
Recommended tightening torque for set screw	3.5 N-m