HR201AS024

Slim SSR relay, 24VDC, 2A, 1 SSR contact, output 24...280VAC



Product designation			SLIM RELAY
Product type designation			HR20
Contact characteristics			
Contact configuration			1 Static
Rated insulation voltage Ui IEC/EN		V	2500 (input/output)
IEC Conventional free air thermal current Ith		A	2
Maximum instantaneous current		A	80 (10ms)
Rated current (In)		A	2
Relay control voltage		V	24VDC
Max contrallable power in			
	AC-1	W	1500
	AC-15	VA	360
Rated operating power AC-1			
		VA	2A output 24… 280VAC
Rated operating power AC-15			
	230 VAC	VA	2A output 24… 280VAC
Single-phase motor control			
	230VAC	kW	2A output 24… 280VAC
Rated operating current DC-1			
	30V	A	2A output 24… 280VAC
	110V	A	2A output 24… 280VAC
	220V	A	2A output 24… 280VAC
Minimum switching load		V / mA	24 / 0.1
Operating times			
Closing		ms	10
Opening		ms	10
Operations			
Mechanical life		cycles	Theoretically infinite
Electrical life AC1		cycles	Theoretically infinite
Coil characteristics			
Operating range			
	Closing	% Un	80…120
Maximum cycle frequency		cycles/h	>100000
Mechanical features			
Max socket terminal tightening torque		Nm	0.5
Socket screw tightening tool (cross / flat blade)			PH0 / 3.5mm
Conductor section			

The characteristics described in this document are subject to updates or modifications at any time. The descriptions, technical and functional information, illustrations and instructions in this brochure are purely illustrative, and are consequently not contractually binding

	AWG/Kcmil			
		min		20
		max		16
	IEC			
		min	mm²	0.5
		max	mm²	1.5
Operating position				
		normal		Any
Fixing				On 35mm DIN rail

Ambient conditions

Temperature				
	Operating temperature			
		min	°C	-30
		max	°C	+80
	Storage temperature			
		min	°C	-30
		max	°C	+100

Other features

Indication	Yes (on the socket)
Mechanical contact position indicator	No
Mechanical test actuator	No

Dimensions

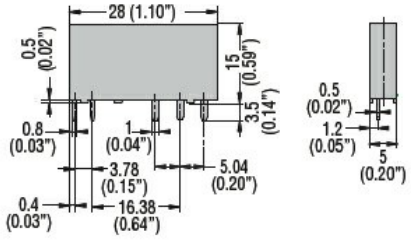

PCB layout

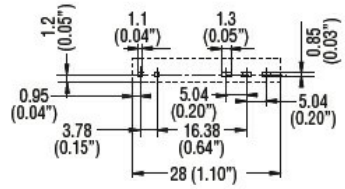

Wiring diagrams

The characteristics described in this document are subject to updates or modifications at any time. The descriptions, technical and functional information, illustrations and instructions in this brochure are purely illustrative, and are consequently not contractually binding

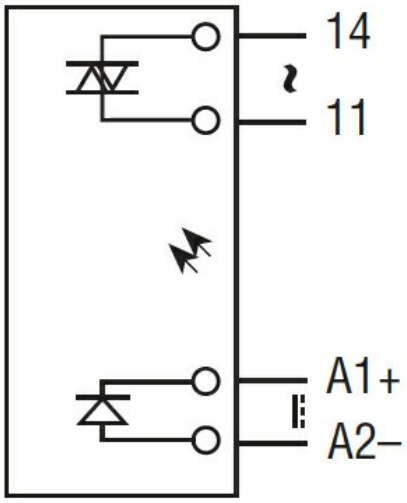

Certifications and compliance

Compliance	
	IEC/EN 62314
Certificates	
	cURus
	TÜV-SUD

ETIM classification

ETIM 8.0	EC002055 - Solid state relay

The characteristics described in this document are subject to updates or modifications at any time. The descriptions, technical and functional information, illustrations and instructions in this brochure are purely illustrative, and are consequently not contractually binding