Part Number: BU-48B/BU-48C
Description: Automotive Analyzer Clip
3707

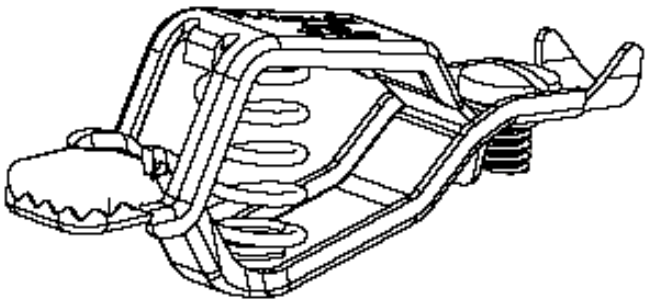

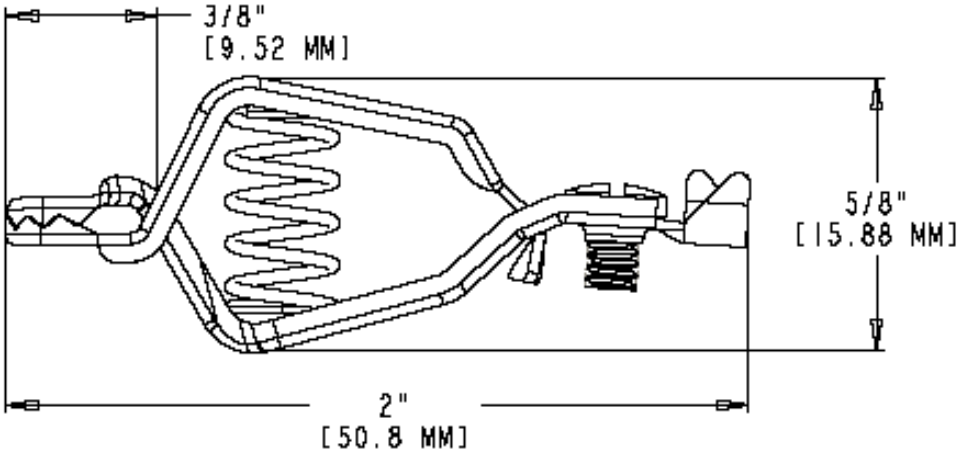

- Automotive Analyzer Clip
- Teeth mesh on three sides of the jaw
- Primary use is for automotive analyzers and test systems
- Crimp or screw connection
- Jaw open 0.5” (12.7 mm) max
- Material: Zinc-plated steel-10 Amp (BU-48B) or solid copper-20 Amps (BU-48C)
- Length: 2” (50.8 mm)
- Federal Spec: CID AA59466-007 (BU-48C)
- RoHS Compliant

Mueller Electric Company
1625 E. 31st Street
Cleveland, Ohio 44114

ISO 9001:2000
Over 95 Years Of Innovation
www.muellerelectric.com

TEL. 800-955-2629
TEL. 216-771-5225
FAX. 216-771-3068