BRASS GATE VALVE FEMALE BSP PN16

Brass gate valve female threaded BSP full bore to close water distribution and watering installation.
Rotating non rising stem with inside screw.
EPDM packing on stem and fiber bonnet gasket.



Size :	DN1/4" to DN4"
Connection :	Female BSP
Min Temperature :	-10°C
Max Temperature :	+80°C
Max Pressure :	16 Bars (20 bars for DN3/8")
Specifications :	Rotating non rising stem Inside screw stem Full bore
Materials :	Brass CW617N according to EN 12165

Sferaco 90 rue du Ruisseau 38297 St Quentin Fallavier Tel: + 33 (0) 474.94.15.90 Fax: + 33 (0) 474.95.62.08 Internet: www.sferaco.fr E-mail : info@sferaco.fr

Information provided as an indication and subject to possible modification

BRASS GATE VALVE FEMALE BSP PN16

SPECIFICATIONS :

- Full bore
- Rotating non rising stem
- Inside screw stem
- Brass
- Single wedge disc
- Female / Female BSP cylindrical ends
- EPDM packing
- **No tightness , loss factor : 0.5% of Kvs**

USE :

- Water distribution and watering
- Min and max Temperature Ts : - 10°C to + 80°C
- Max Pressure Ps : 16 bars (20 bars for DN3/8")
- Do not use for firefighting networks

FLOW COEFFICIENT Kvs (M3 / h) :

DN	1/4"	3/8"	1/2"	3/4"	1"	1"1/4	1"1/2	2"	2"1/2	3"	4"
Kvs (m3/h)	9.2	9.2	11	29	43	81	125	220	380	490	710

RANGE :

- Brass female/female threaded BSP cylindrical ends **Ref. 102** DN 1/4“ to DN 4“

BRASS GATE VALVE FEMALE BSP PN16

MATERIALS :

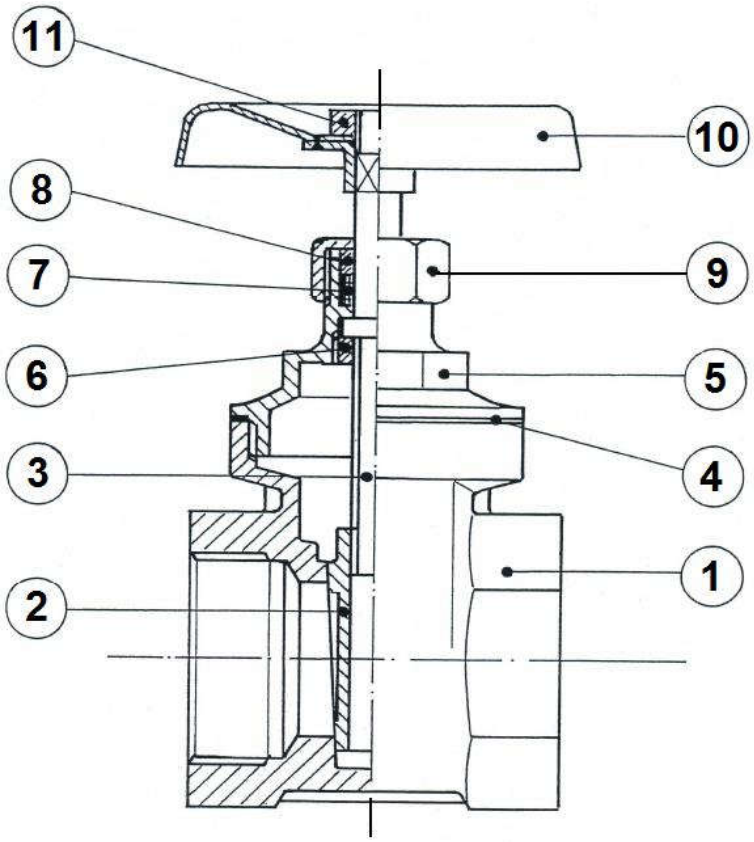

Item	Designation	Materials
1	Body DN 1/4"-2"	Brass CW617N-4MS according to EN 12165
1	Body DN 2"1/2-4"	Brass DELTAC EN1982 CB 754-S GM
2	Wedge	
3	Stem	Brass CW614N-4MS according to EN 12164
4	Bonnet gasket	Fibers
5	Bonnet	Brass CW617N-4MS according to EN 12165
6	Ring	Brass CW614N-4MS according to EN 12164
7	Packing	EPDM
8	Packing gland	Brass CW614N-4MS according to EN 12164
9	Gland nut	
10	Handwheel	Aluminium
11	Handwheel nut	Zinc-coated steel

Information provided as an indication and subject to possible modification

BRASS GATE VALVE FEMALE BSP PN16

SIZE (in mm) :

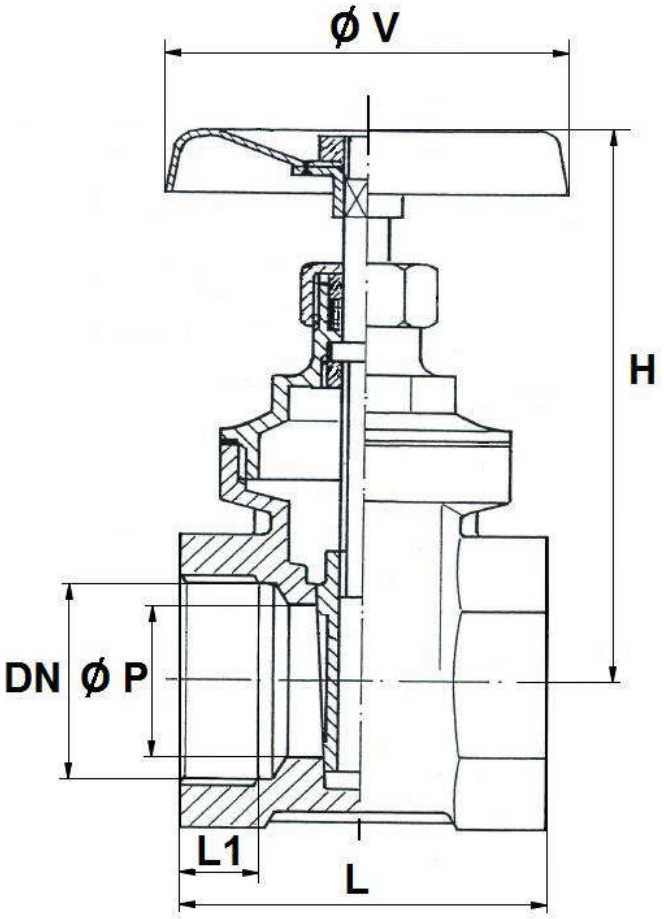

DN	1/4"	3/8"	1/2"	3/4"	1"	1"1/4	1"1/2	2"	2"1/2	3"	4"
Ø P	11	13	15	19	24	32	37	47	60	71	91
L	33	33	38	44	48	52	58	62	63	74	83
L1	8	8	9	10	11	12	13	13	13	14	16
H	67	67	68	76	90	108	126	146	175	196	230
Ø V	45	45	45	50	55	60	70	80	100	100	120
Weight (in Kg)	0.17	0.15	0.18	0.26	0.36	0.53	0.70	1.08	1.72	2.31	4.3
Ref.	102002	102003	102004	102005	102006	102007	102008	102009	102010	102011	102012

Sferaco 90 rue du Ruisseau 38297 St Quentin Fallavier Tel: + 33 (0) 474.94.15.90 Fax: + 33 (0) 474.95.62.08 Internet: www.sferaco.fr E-mail : info@sferaco.fr

Information provided as an indication and subject to possible modification

BRASS GATE VALVE FEMALE BSP PN16

STANDARDS :

- Manufacturer certified ISO 9001 : 2015
- DIRECTIVE 2014/68/EU : Products excluded from directive (Article 1, § 2b)
- Threaded female / female BSP cylindrical ends according to ISO 228/1

ADVICE : Our opinion and our advice are not guaranteed and SFERACO shall not be liable for the consequences of damages.
The customer must check the right choice of the products with the real service conditions.