Angular contact ball bearings

7205-B-XL-TVP (Series 72..-B)

main dimensions to DIN 628-1, contact angle α = 40°

The datasheet is only an overview of dimensions and basic load ratings of the selected product. Please always observe all the guidelines in these overview pages. Further information is given on many products under the menu item "Description". You can also order comprehensive information via the Catalogue selection system (http://www.fag.de/content.fag.de/en/mediathek/library/library.jsp) or by telephone on +49 (91 32) 82 - 28 97.

d	25	mm	
D	52	mm	
B	15	mm	
a	24	mm	
D_1	42	mm	
d_1	35,5	mm	
$D_{a\ max}$	46,4	mm	
$d_{a\ min}$	30,6	mm	
$D_{b\ max}$	47,8	mm	
$r_{1\ min}$	0,6	mm	
$r_{a1\ max}$	0,6	mm	
$r_{a\ max}$	1	mm	
r_{min}	1	mm	
α	40	°	Contact angle
m	0,127	kg	Mass
C_r	15300	N	Basic dynamic load rating, radial
C_{0r}	9000	N	Basic static load rating, radial
n_G	17400	1/min	Limiting speed
n_B	13700	1/min	Reference speed
C_{ur}	600	N	Fatigue limit load, radial

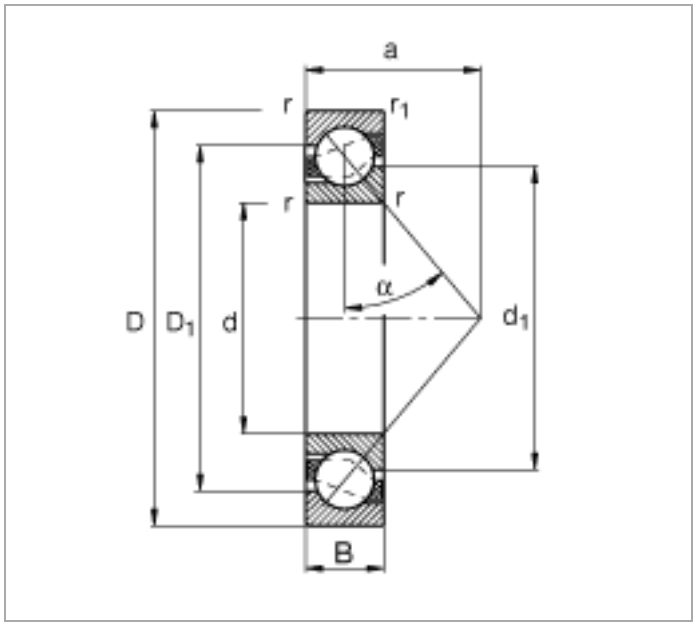
a
r
r1
r
r
α
D
D1
d
d1
B

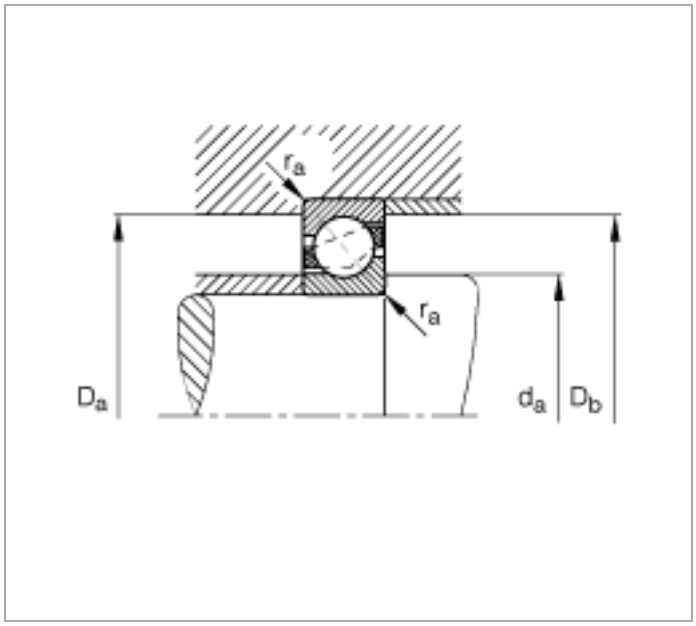
ra
ra
Da
da
Db