WACHENDORFF
The Encoder Experts



Online Data sheet

Encoder WDGN 58B

www.wachendorff-automation.com/wdgn58b

Wachendorff Automation

... systems and encoders

- Complete systems
- Industrial rugged encoders to suit your application
- Standard range and customer versions
- Maximum permissible loads
- 48-hour express production
- Made in Germany
- Worldwide distributor network

IndustrieROBUST

Encoder WDGN 58B configurable via Smartphone (NFC)



Illustration similar

Wachendorff Apps WDGN

- Due to high quality electronics any number of pulses up to 16384 configurable via NFC
- HTL/TTL configurable via NFC
- Protection class IP67, at shaft input IP65
- High output frequency up to 1 MHz
- Reverse polarity protection and short-circuit protection at 4.75 VDC to 32 VDC

www.wachendorff-automation.com/wdgn58b

Configurable via NFC

Resolution	
Pulses per revolution PPR	1 PPR up to 16384 PPR

Mechanical Data	
Flange	clamping flange
Flange material	aluminum
Housing material	Stainless steel, NFC cover: Thermoplastic polyamide
Flange diameter	Ø 58 mm [Ø 2.283"]
Cam mounting	pitch 69 mm [2.717 inches] (Accessory SP-3-00)

Shaft(s)	
Shaft material	stainless steel
Starting torque	approx. 1 Ncm [1.416 in-ozf] at ambient temperature
Shaft	Ø 6 mm [Ø 0.236"]
Advice	Attention: No option AAO = full IP67 version
Shaft length	L: 12 mm [0.472"]
Max. Permissible shaft loading radial	125 N [12.746 kp]
Max. Permissible shaft loading axial	120 N [12.236 kp]
Shaft	Ø 8 mm [Ø 0.315"]
Advice	Attention: No option AAO = full IP67 version
Shaft length	L: 19 mm [0.748"]
Max. Permissible shaft loading radial	125 N [12.746 kp]
Max. Permissible shaft loading axial	120 N [12.236 kp]
Shaft	Ø 9.525 mm [Ø 3/8"] Order No: 4Z
Advice	Attention: No option AAO = full IP67 version
Shaft length	L: 20 mm [0.787"]
Max. Permissible shaft loading radial	220 N [22.433 kp]
Max. Permissible shaft loading axial	120 N [12.236 kp]
Shaft	Ø 10 mm [Ø 0.394"]
Shaft length	L: 20 mm [0.787"]
Max. Permissible shaft loading radial	220 N [22.433 kp]
Max. Permissible shaft loading axial	120 N [12.236 kp]

Bearings	
Bearings type	2 precision ball bearings
Nominale service life	1 x 10'9 revs. at 100 % rated shaft load 1 x 10'10 revs. at 40 % rated shaft load 1 x 10'11 revs. at 20 % rated shaft load
Max. operating speed	8000 rpm

Machinery Directive: basic data safety integrity level	
$MTTF_d$	1200 a
Mission time (TM)	25 a
Nominale service life (L10h)	1 x 10'11 revs. at 20 % rated shaft load and 8000 rpm
Diagnostic coverage (DC)	0 %

Electrical Data	
Power supply/Current consumption	4,75 VDC up to 32 VDC: typ. 80 mA
Operating principle	magnetic
Output circuit	HTL HTL, inv. TTL TTL, RS422 compatible, inv.
Pulse frequency	HTL up to 16384 ppr: max. 600 kHz TTL up to 16384 ppr: max. 1 MHz
Channels	ABN CH4 and inverted signals
Load	max. 40 mA / channel
Circuit protection	inverse-polarity and short-circuit protection
Nullimpuls setzen:	Setzen: SET = +UB für 2 s Deaktiviert: SET = GND

Accuracy	
Phase offset	90° ± max. 8.5 % of the period duration
pulse-/pause-ratio	50 % ± max. 7 %

Configurable via NFC:	
BASIC: (BAS)	
Channels:	ABN and inverted
HTL / TTL	freely selectable
Pulses / revolution:	1 ppr up to 16384 ppr freely selectable

Advanced (ADV):	
Channels:	4 channels configurable + inv. signals (ABN possible)
HTL / TTL:	freely selectable
Pulses / revolution:	1 ppr up to 16384 ppr freely selectable
Number of pulses for each channel:	individually selectable
Set zero pulse:	yes
Pulse width and position:	Width and position adjustable

Environmental data	
Noise immunity:	
ESD (DIN EN 61000-4-2):	8 kV
EMC: (DIN EN 61000-4-3):	10 V/m
Burst (DIN EN 61000-4-4):	2 kV
High frequency fields (DIN EN 61000-4-6):	10 V
Surge (DIN EN 61000-4-5):	2 kV
Radio interference:	According DIN EN 55011
NFC:	
EMC:	According ETSI EN 301 489
RED:	According ETSI EN 300 330
Electrical safety:	DIN EN 61010-1 (VDE 0411-1) / IEC 61010-1 / UL 61010-1 / CSA C22.0 No 61010-1-12
Vibration: (DIN EN 60068-2-6)	300 m/s² (10 Hz up to 2000 Hz)
Shock: (DIN EN 60068-2-27)	1000 m/s² (6 ms)

Duty information	
Customs tariff number:	90318020
Country of origin:	Germany

General Data	
Weight	approx. 220 g [7.76 oz]
Connections	cable or connector outlet
Protection rating (EN 60529)	Housing: IP65, IP67; shaft sealed: IP65; cable outlet K1: IP40
Operating temperature	Connector: -40 °C up to +85 °C, Cable: -20 °C up to +80 °C. Connector: -40 °F up to +185 °F, Cable: -4 °F up to +176 °F.
Storage temperature	Connector: -40 °C up to +100 °C, Cable: -30 °C up to +80 °C Connector: -40 °F up to +212 °F, Cable: -22 °F up to +176 °F

More Information
General technical data and safety instructions **http://www.wachendorff-automation.com/gtd**
Options **http://www.wachendorff-automation.com/acc**

Cable connection L2 axial with 2 m cable (BAS)

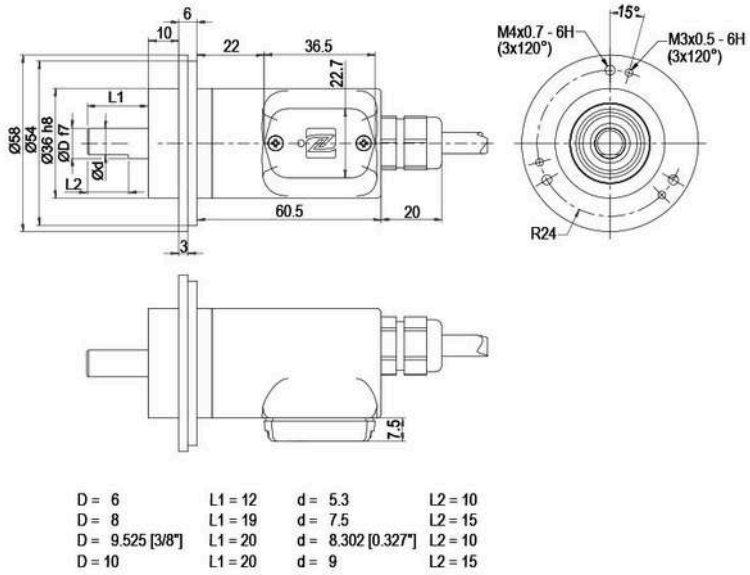

D = 6	L1 = 12	d = 5.3	L2 = 10
D = 8	L1 = 19	d = 7.5	L2 = 15
D = 9.525 [3/8"]	L1 = 20	d = 8.302 [0.327"]	L2 = 10
D = 10	L1 = 20	d = 9	L2 = 15

Alle Abmessungen in mm / All dimensions in mm

Description		ABN inv. poss.
L2	axial, shield connected to encoder housing	•

Assignments	
	L2
Circuit	BAS
GND	WH
(+) Vcc	BN
A	GN
B	YE
N	GY
A inv.	RD
B inv.	BK
N inv.	VT
Shield	flex

Cable connection L2 axial with 2 m cable (ADV)

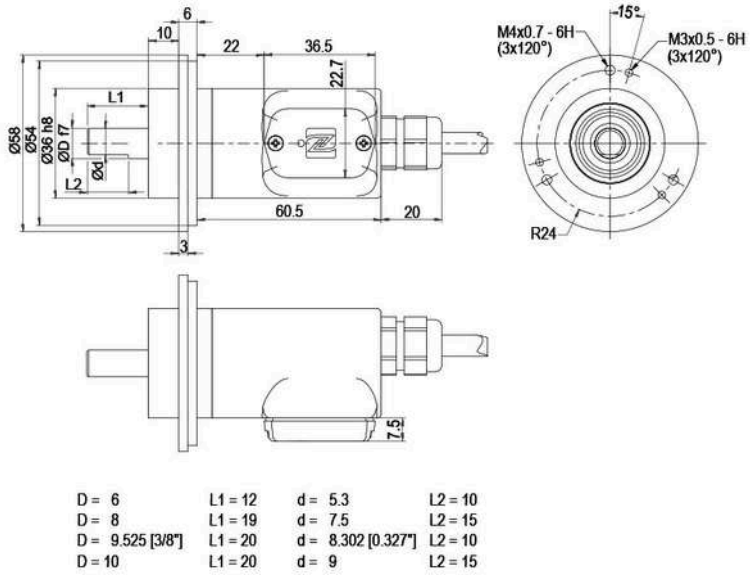

D = 6	L1 = 12	d = 5.3	L2 = 10
D = 8	L1 = 19	d = 7.5	L2 = 15
D = 9.525 [3/8"]	L1 = 20	d = 8.302 [0.327"]	L2 = 10
D = 10	L1 = 20	d = 9	L2 = 15

Alle Abmessungen in mm / All dimensions in mm

Description		ABN inv. poss.
L2	axial, shield connected to encoder housing	•

Assignments	
	L2
Circuit	ADV
GND	WH
(+) Vcc	BN
CH1	GN
CH2	YE
CH3	GY
CH4	GYPK
SET	PK
CH1 inv.	RD
CH2 inv.	BK
CH3 inv.	VT
CH4 inv.	RDBU
Shield	flex

Cable connection L3 radial with 2 m cabel (BAS)

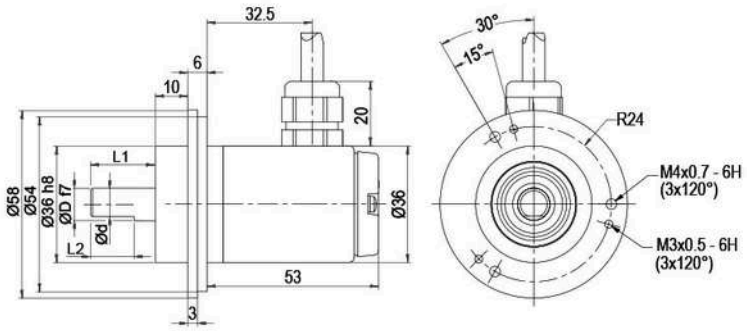

D = 6	L1 = 12	d = 5.3	L2 = 10
D = 8	L1 = 19	d = 7.5	L2 = 15
D = 9.525 [3/8"]	L1 = 20	d = 8.302 [0.327"]	L2 = 10
D = 10	L1 = 20	d = 9	L2 = 15

Alle Abmessungen in mm / All dimensions in mm

Description		ABN inv. poss.
L3	radial, shield connected to encoder housing	•

Assignments	
	L3
Circuit	BAS
GND	WH
(+) Vcc	BN
A	GN
B	YE
N	GY
A inv.	RD
B inv.	BK
N inv.	VT
Shield	flex

Cable connection L3 radial with 2 m cabel (ADV)

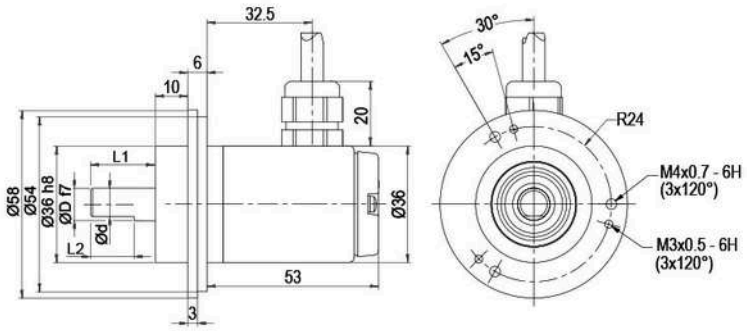

D = 6	L1 = 12	d = 5.3	L2 = 10
D = 8	L1 = 19	d = 7.5	L2 = 15
D = 9.525 [3/8"]	L1 = 20	d = 8.302 [0.327"]	L2 = 10
D = 10	L1 = 20	d = 9	L2 = 15

Alle Abmessungen in mm / All dimensions in mm

Description		ABN inv. poss.
L3	radial, shield connected to encoder housing	•

Assignments	
	L3
Circuit	ADV
GND	WH
(+) Vcc	BN
CH1	GN
CH2	YE
CH3	GY
CH4	GYPK
SET	PK
CH1 inv.	RD
CH2 inv.	BK
CH3 inv.	VT
CH4 inv.	RDBU
Shield	flex

Cable K1 (IP40) radial with 2 m cable (BAS)

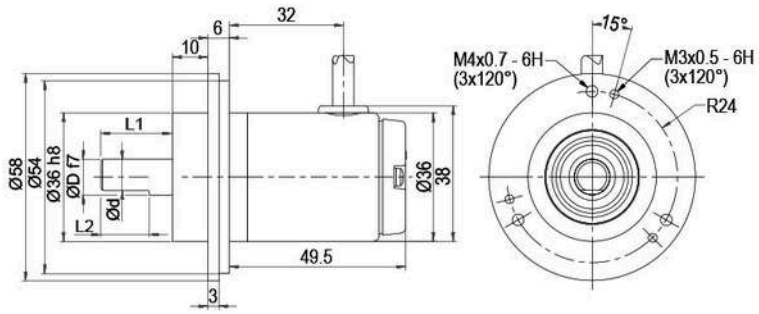

D = 6	L1 = 12	d = 5.3	L2 = 10
D = 8	L1 = 19	d = 7.5	L2 = 15
D = 9.525 [3/8"]	L1 = 20	d = 8.302 [0.327"]	L2 = 10
D = 10	L1 = 20	d = 9	L2 = 15

Alle Abmessungen in mm / All dimensions in mm

Description		ABN inv. poss.
K1	radial, shield not connected (IP40)	•

Assignments	
	K1
Circuit	BAS
GND	WH
(+) Vcc	BN
A	GN
B	YE
N	GY
A inv.	RD
B inv.	BK
N inv.	VT
Shield	flex

Cable K1 (IP40) radial with 2 m cable (ADV)

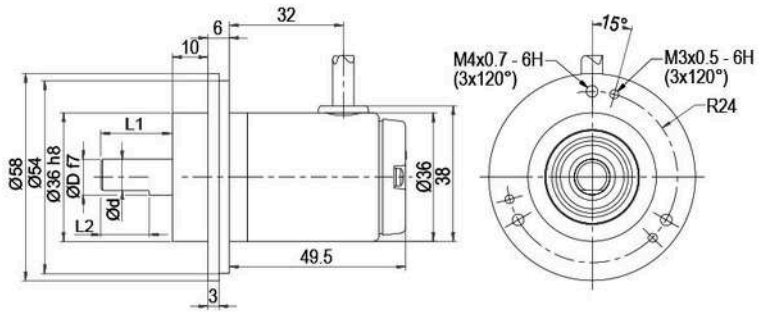

D = 6	L1 = 12	d = 5.3	L2 = 10
D = 8	L1 = 19	d = 7.5	L2 = 15
D = 9.525 [3/8"]	L1 = 20	d = 8.302 [0.327"]	L2 = 10
D = 10	L1 = 20	d = 9	L2 = 15

Alle Abmessungen in mm / All dimensions in mm

Description		ABN inv. poss.
K1	radial, shield not connected (IP40)	•

Assignments	
	K1
Circuit	ADV
GND	WH
(+) Vcc	BN
CH1	GN
CH2	YE
CH3	GY
CH4	GYPK
SET	PK
CH1 inv.	RD
CH2 inv.	BK
CH3 inv.	VT
CH4 inv.	RDBU
Shield	flex

Sensor connector (M12x1) SB axial, 8-pin (BAS)

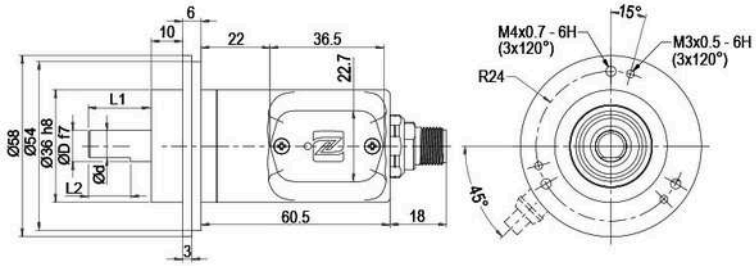

D = 6	L1 = 12	d = 5.3	L2 = 10
D = 8	L1 = 19	d = 7.5	L2 = 15
D = 9.525 [3/8"]	L1 = 20	d = 8.302 [0.327"]	L2 = 10
D = 10	L1 = 20	d = 9	L2 = 15

Alle Abmessungen in mm / All dimensions in mm

Description		ABN inv. poss.
SB8	axial, 8-pin, Connector connected to encoder housing	•

Assignments	
	SB8
	8-pin
	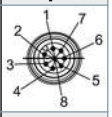
Circuit	BAS
GND	1
(+) Vcc	2
A	3
B	4
N	5
A inv.	6
B inv.	7
N inv.	8

Sensor connector (M12x1) SB axial, 12-pin (ADV)

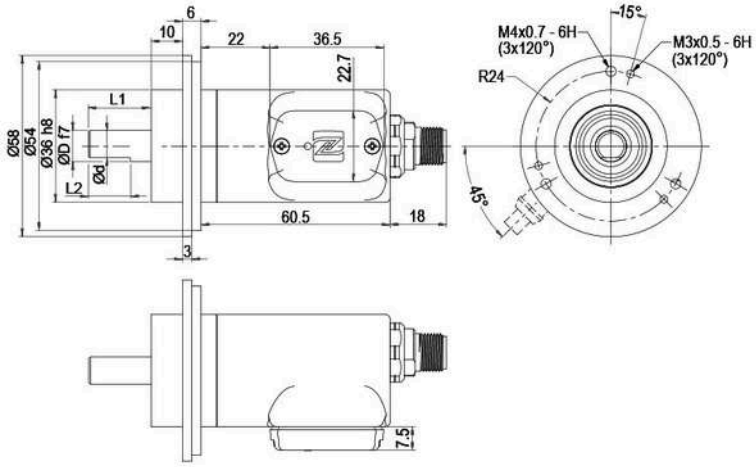

D = 6	L1 = 12	d = 5.3	L2 = 10
D = 8	L1 = 19	d = 7.5	L2 = 15
D = 9.525 [3/8"]	L1 = 20	d = 8.302 [0.327"]	L2 = 10
D = 10	L1 = 20	d = 9	L2 = 15

Alle Abmessungen in mm / All dimensions in mm

Description	ABN inv. poss.
SB12 axial, 12-pin, Connector connected to encoder housing	•

Assignments	
	SB12
	12-pin
	
Circuit	ADV
GND	3
(+) Vcc	1
CH1	4
CH2	6
CH3	8
CH4	11
SET	5
CH1 inv.	9
CH2 inv.	7
CH3 inv.	10
CH4 inv.	12
n. c.	2

Sensor-connector (M12x1) SC radial, 8-pin (BAS)

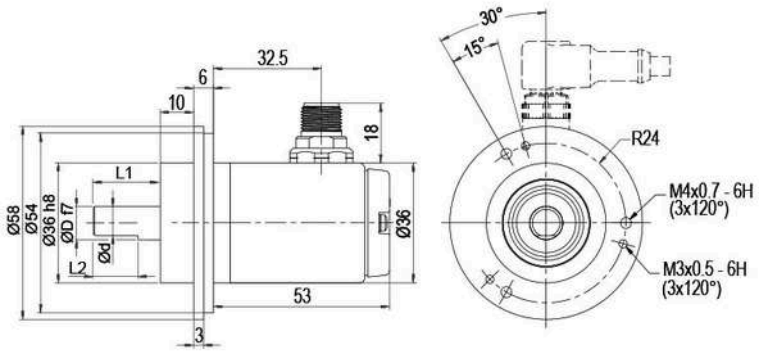

D = 6	L1 = 12	d = 5.3	L2 = 10
D = 8	L1 = 19	d = 7.5	L2 = 15
D = 9.525 [3/8"]	L1 = 20	d = 8.302 [0.327"]	L2 = 10
D = 10	L1 = 20	d = 9	L2 = 15

Alle Abmessungen in mm / All dimensions in mm

Description		ABN inv. poss.
SC8	radial, 8-pin, Connector connected to encoder housing	•

Assignments	
	SC8
	8-pin
	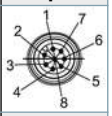
Circuit	BAS
GND	1
(+) Vcc	2
A	3
B	4
N	5
A inv.	6
B inv.	7
N inv.	8

Sensor-connector (M12x1) SC radial, 12-pin (ADV)

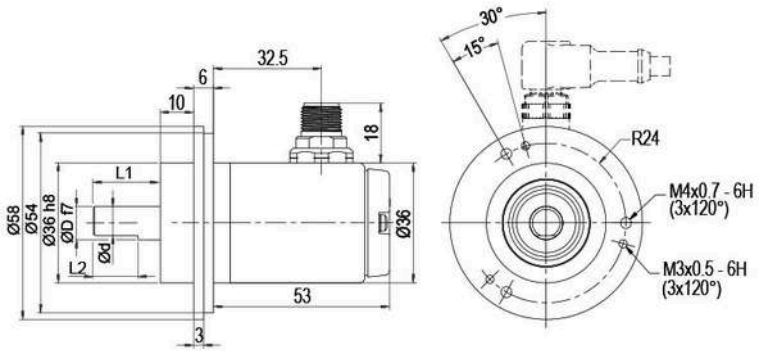

D = 6	L1 = 12	d = 5.3	L2 = 10
D = 8	L1 = 19	d = 7.5	L2 = 15
D = 9.525 [3/8"]	L1 = 20	d = 8.302 [0.327"]	L2 = 10
D = 10	L1 = 20	d = 9	L2 = 15

Alle Abmessungen in mm / All dimensions in mm

Description	ABN inv. poss.
SC12 radial, 12-pin, Connector connected to encoder housing	•

Assignments	
	SC12
	12-pin
	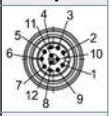
Circuit	ADV
GND	3
(+) Vcc	1
CH1	4
CH2	6
CH3	8
CH4	11
SET	5
CH1 inv.	9
CH2 inv.	7
CH3 inv.	10
CH4 inv.	12
n. c.	2

Options

Low-friction bearings	Order key
The encoder WDGN 58B is also available as a particularly smooth-running low-friction encoder. The starting torque is thereby changed to ≤ 0.5 Ncm [0.708 in-ozf] and the protection class at the shaft input to IP50.	**AAC**

Shafts sealed to IP67, only with 10 mm [0.394"] shaft	Order key
The encoder WDGN 58B can be supplied in a IP67 version. (full IP67 only connection SB, SC, L2 or L3 version; not cable connection K1 = IP40). Max. RPM: 3500 min'-1 Permitted Shaft-Loading: axial 100 N [10.197 kp]; radial 110 N [11.216 kp] Starting-torque: approx. 4 Ncm [5.664 in-ozf] at ambient temperature	**AAO**

Cable length	Order key
The encoder WDGN 58B can be supplied with more than 2 m cable. The maximum cable length depends on the supply voltage and the frequency; see https://www.wachendorff-automation.com/download-gtd-incremental-encoders/ Please extend the standard order code with a three figure number, specifying the cable length in decimetres. Example: 5 m cable = 050	**XXX = Decimeter**

Example Order No.	Type						Your encoder
WDGN 58B	WDGN 58B						WDGN 58B
	Shaft						
10	06; 08; 4Z; 10						
	Pulses per revolution PPR:						
X	1-16384 configurable Other PPRs on request						
	Channels:						
X	X (BAS=ABN, ADV= CH1,CH2,CH3,CH4)						
	Output circuit						
BAS	**Resolution PPR**	**Power supply VDC**	**Output circuit**		**-**	**Order key**	
	configurable 1-16384	4.75 - 32	configurable HTL, TTL (A,B,N + inv.)		-	BAS	
		4.75 - 32	configurable HTL, TTL; 4 channels+inv.		-	ADV	
	Electrical connections						
L2	**Description**				**ABN inv. poss.**	**Order key**	
	Cable: length (2 m standard, WDG 58T: 1 m)						
	radial, shield not connected (IP40)				•	K1	
	axial, shield connected to encoder housing				•	L2	
	radial, shield connected to encoder housing				•	L3	
	Connector: (shield connected to encoder housing)						
	sensor-connector, M12x1, 8-pin, axial				•	SB8	
	sensor-connector, M12x1, 8-pin, radial				•	SC8	
	sensor-connector, M12x1, 12-pin, axial				•	SB12	
	sensor-connector, M12x1, 12-pin, radial				•	SC12	
	Options						
	Description				**Order key**		
	Low-friction bearings				AAC		
	Shafts sealed to IP67, only with 10 mm [0.394"] shaft				AAO		
	Without option				Empty		
	Cable length				XXX = Decimeter		

Example Order No.=	WDGN 58B	10	X	X	BAS	L2		WDGN 58B							Your encoder

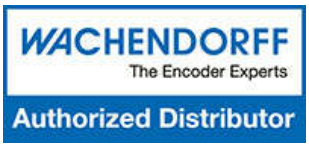

For further information please contact our local distributor.
Here you find a list of our distributors worldwide.
https://www.wachendorff-automation.com/contact-en/wachendorff-world-wide/

WACHENDORFF

Wachendorff Automation GmbH & Co. KG
Industriestrasse 7 • 65366 Geisenheim
Germany

Phone: +49 67 22 / 99 65 25
E-Mail: wdg@wachendorff.de
www.wachendorff-automation.de