Inclinometers

For static applications 1- and 2-axis measurement	IN48	Fieldbus



High accuracy with minimal movement.
Measurement is performed capacitively in acceleration measurement cells for applications with little or no movement. Vibrations and shocks can be compensated for within certain limits by software filters.

Order code 1-axis measurement

8.IN48 . 1 7 X 1 . 1 X X . XXXX
Type a b c e f g

a *Measurement axes*
1 = 1-axis
vertical mounting



b *Measuring range*
7 = 0 ... 360° (±180°)

c *Interface*
2 = CANopen
3 = SAE J1939
6 = Modbus RTU

e *Supply voltage*
1 = 7,5 ... 30 V DC
2 = 5 V DC

f *Type of connection*
2 = M12 connector, 5-pin
4 = cable 5-core, open ended, 1 m
B = cable 5-core, open ended, special lengths

g *Special lengths*
only for type of connection **f** *= B*
(other lengths on request)
0050 = 5 m
0100 = 10 m

Stock types
8.IN48.1721.112

Order code 2-axis measurement

8.IN48 . 2 6 X 1 . 1 X X . XXXX
Type a b c d f g

a *Measurement axes*
2 = 2-axis
horizontal mounting



b *Measuring range*
6 = ± 85°

c *Interface*
2 = CANopen
3 = SAE J1939
6 = Modbus RTU

e *Supply voltage*
1 = 7,5 ... 30 V DC
2 = 5 V DC

f *Type of connection*
2 = M12 connector, 5-pin
4 = cable 5-core, open ended, 1 m
B = cable 5-core, open ended, special lengths

g *Special lengths*
only for type of connection **f** *= B*
(other lengths on request)
0050 = 5 m
0100 = 10 m

Stock types
8.IN48.2621.112

Cables and connectors		Order no.
Preassembled cables	M12 female connector with coupling nut, 5-pin, A coded, straight single ended 5 m [16.40'] PVC cable	**05.00.6091.A211.005M**
	M12 female connector with coupling nut, 5-pin, A coded, straight single ended 2 m [6.56'] PUR cable	**05.00.60F1.2211.002M**
Connectors	M12 female connector with coupling nut, 5-pin, A coded, straight (metal/plastic)	**05.B-8151-0/9**

Further Kübler accessories can be found at: kuebler.com/accessories
Further Kübler cables and connectors can be found at: kuebler.com/connection-technology

© Fritz Kübler GmbH, subject to errors and changes. 06/2026

For static applications
1- and 2-axis measurement | **IN48** | **Fieldbus**

Technical data

General data 1-axis measurement

Measuring range	0 ... 360°
Resolution	0.01°
Repeat accuracy	±0.2°
Linearity	±0.1°
Temperature coefficient	typ. ±0.006° / K
Accuracy (at 25°C)	±0.15 ... ±0.2° depending on the measuring range

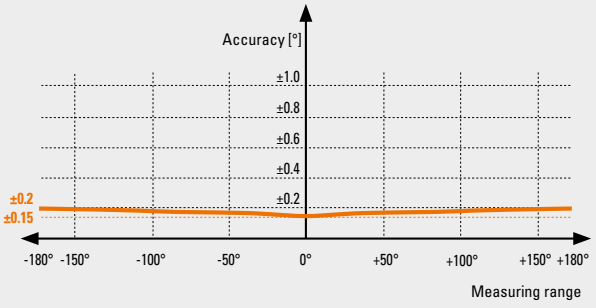

General data 2-axis measurement

Measuring range	-85 ... +85°
Resolution	0.01°
Repeat accuracy	±0.2°
Linearity	±0.3°
Temperature coefficient	typ. ±0.006° / K
Accuracy (at 25°C)	±0.15° ... ±0.5° depending on the measuring range

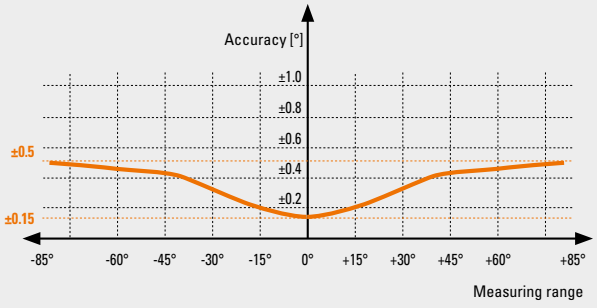

General electrical characteristics

Supply voltage	7.5 ... 30 V DC 5 V DC
Current consumption	max. 40 mA
Reverse polarity protection of the supply voltage	yes
Sampling rate	50 Hz (20 ms)
Limit frequency with Butterworth filter	0.1 ... 10 Hz, 8. order
factory setting	typ. 10 Hz

EMC

Relevant standards	EN 61326-1	Electrical equipment for measurement, control and laboratory use
	EN 55011 Klasse B, EN 61000-6-3	Emitted interferences for residential environments

Mechanical characteristics

Electrical connection	M12 connector, 5-pin cable, 5-core
Weight	approx. 60 g [2.1 oz]
Protection acc. to EN 60529	IP68/IP69k
Working temperature range	-40 °C ... +85 °C [-40 °F ... +185 °F]
Material housing	plastic, PC
Shock resistance acc. to EN 60068-2-27	1000 m/s², 6 ms
Vibration resistance acc. to EN 60068-2-6	100 m/s², 10 ... 2000 Hz
Dimensions	44.5 x 42.5 x 20 mm [1.75 x 1.67 x 0.79“]

Approvals

E1 compliant in accordance with	ECE guideline
UL compliant in accordance with [1]	File no. E224618
CE compliant in accordance with	
EMC Directive	2014/30/EU
RoHS Directive	2011/65/EU

1) The IP protection class is not UL-tested. Verified by Kübler.

© Fritz Kübler GmbH, subject to errors and changes. 06/2026

For static applications
1- and 2-axis measurement | **IN48** | **Fieldbus**

Dimensions

Dimensions in mm [inch]

Version with M12 connector

1 RGB LED status indicator
2 M12 connector

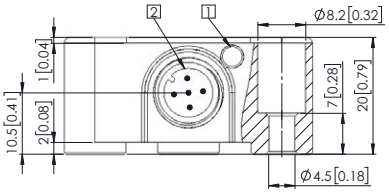

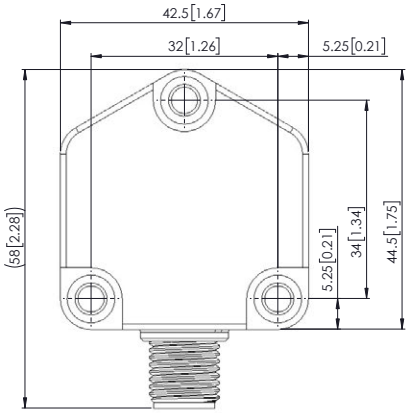

Version with cable

1 RGB LED status indicator

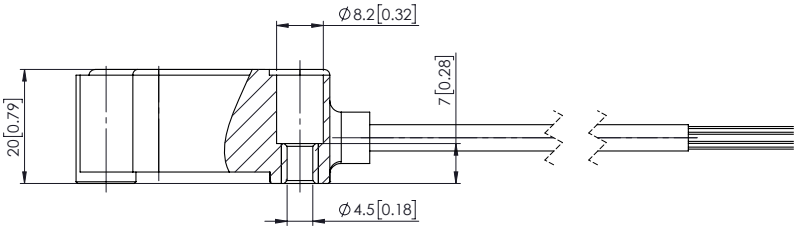

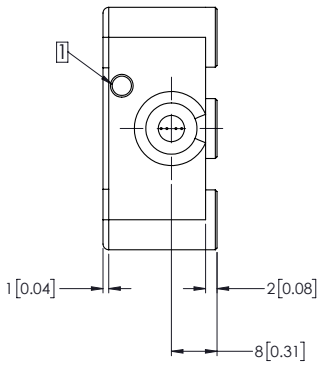

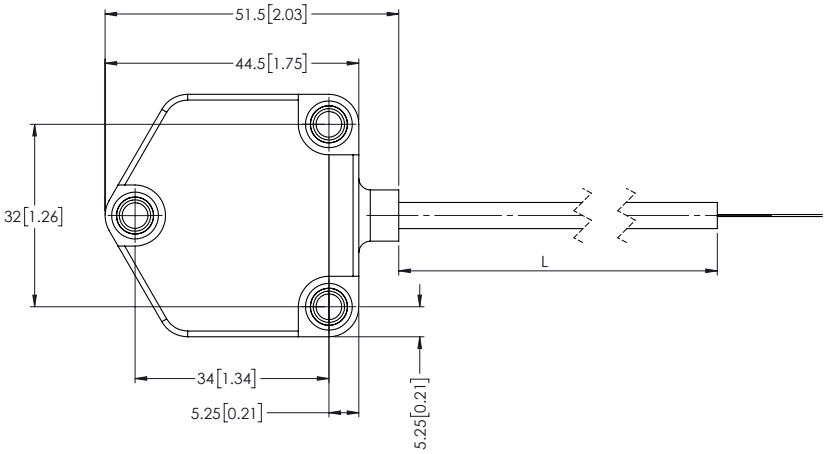

© Fritz Kübler GmbH, subject to errors and changes. 06/2026

For static applications
1- and 2-axis measurement | **IN48** | **Fieldbus / CANopen**

Interface characteristics CANopen

General information on CANopen

The CANopen inclinometers support the latest CANopen communications profile according to DS301. In addition, device-specific profiles such as the inclinometer profile DS410 and DS305 (LSS) are available.

The following operating modes may be selected: Polled Mode, Cyclic Mode, Sync Mode. Moreover, scale factors, preset values and many other additional parameters can be programmed via the CAN bus. When switching the appliance on, all parameters are loaded from a flash memory. These parameters have previously been stored in a zero-voltage secure manner. The output values **position, position raw value, sensor temperature and sensor information** can be combined very variably as a PDO (PDO mapping). The inclinometers are available with one or two connectors.

The device address and baud rate can be set/modified by means of the software.

The two-color LED indicates the operating or fault status of the CAN bus, as well as the status of the internal diagnostics.

Characteristics CANopen

Interface		CAN high-speed acc. to ISO 11898, Basic- and Full-CAN, CAN specification 2.0 B
Protocol		CANopen profile DS410 V1.3 with manufacturer-specific add-ons, communication profile DS301 V4.2
Baud rate	software configurable	10 kbit/s, 20 kbit/s, 50 kbit/s, 125 kbit/s, 250 kbit/s, 500 kbit/s, 800 kbit/s, 1 Mbit/s
	default	250 kbit/s
Node address		
	software configurable	1... 127
	default	62
Termination		
	software configurable	0 = OFF, 1 = ON
	default	1 = ON
LSS protocol		DS305 layer setting services 2.2

LSS layer setting services DS305 V2.2

- Global command support for node address and baud rate configuration.
- Selective protocol via identity object (1018h).

CANopen communication profile DS301 V4.2

Among others, the following functionality is integrated (Class C2 functionality):

- NMT slave.
- Heartbeat protocol.
- Identity object.
- Error behavior object.
- Variable PDO mapping, 2 sending PDO's.
- Node address, baud rate and programmable CANbus termination.

CANopen Inclinometer profile DS410 V1.3

The following parameters can be programmed:

- Variable PDO mapping of position, position raw value, sensor temperature and sensor information.
- Extended failure management.
- User interface with visual display of bus and failure status - 1 LED two-color.
- Customer-specific protocol.
- "Watchdog controlled" device.

Terminal assignment

Interface	Type of connection	1 x M12 connector, 5-pin					
2	2		Bus IN				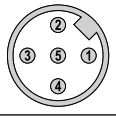
		Signal:	+V	0 V	CAN_GND	CAN_H	CAN_L
		Pin:	2	3	1	4	5

Interface	Type of connection	Cable					
2	4, B		Bus IN				
		Signal:	+V	0 V	CAN_GND	CAN_H	CAN_L
		Core color:	BN	WH	GY	GN	BU

© Fritz Kübler GmbH, subject to errors and changes. 06/2026

For static applications
1- and 2-axis measurement | **IN48** | **Fieldbus / CANopen**

Interface characteristics CANopen

CANopen object dictionary

Index (hex)	Sub Index	Data type	Name	Default value
1005h	0	U32	COB-ID Sync	80h
1014h	0	U32	COB-ID Emcy	BEh
1017h	0	U32	Producer heartbeat time	0
	1	U8	Communication Error	0
	2	U8	Sync Error	0
	3	U8	Internal Device Error	0
1800h			TPDO1 Communication Parameter	
	1	U32	COB-ID	1BEh
	2	U8	Transmission Type	255
	5	U16	Event timer	0 [step 1 ms]
1801h			TPDO2 Communication Parameter	
	1	U32	COB-ID	2BEh
	2	U8	Transmission Type	1
	5	U16	Event timer	0 [step 1 ms]
Mapping at 2-axis				
1A00h			TPDO1 Mapping	
	0	U8	Number of Entries	3
	1	U32	1.Mapped Object	0x60100010
	2	U32	2.Mapped Object	0x60200010
	3	U32	3.Mapped Object	0x50000010
	4	U32	4.Mapped Object	0
1A01h			TPDO2 Mapping	
	0	U8	Number of Entries	3
	1	U32	1.Mapped Object	0x60100010
	2	U32	2.Mapped Object	0x60200010
	3	U32	3.Mapped Object	0x50000010
	4	U32	4.Mapped Object	0
Mapping at 1-axis				
1A00h			TPDO1 Mapping	
	0	U8	Number of Entries	2
	1	U32	1.Mapped Object	0x60100010
	2	U32	2.Mapped Object	0x50000010
	3	U32	3.Mapped Object	0
	4	U32	4.Mapped Object	0
1A01h			TPDO2 Mapping	
	0	U8	Number of Entries	2
	1	U32	1.Mapped Object	0x60100010
	2	U32	2.Mapped Object	0x50000010
	3	U32	3.Mapped Object	0
	4	U32	4.Mapped Object	0

Index (hex)	Sub Index	Data type	Name	Default value
Profile DS410 Inclinometer				
6000h	0	U16	Resolution	0
6011h	0	U8	Slope long16 operating parameter	0
6012h	0	I16	Slope long16 preset value	0
6013h	0	I16	Slope long16 offset	0
6014h	0	I16	Differential Slope long16 offset	0
6021h .. 6024h only at 2-axis				
6021h	0	U8	Slope lateral16 opera- ting parameter	0
6022h	0	I16	Slope lateral16 preset value	0
6023h	0	I16	Slope lateral16 offset	0
6024h	0	I16	Differential Slope lateral16 offset	0
Manufacturer specific objects				
2100h	0	U8	Baud rate	5 (250 kBit/s)
2101h	0	U8	Node Number	0x3E (62d)
2102h	0	U8	Termination	1 = ON
2105h	0	U32	Save All Bus Parameters	0x65766173
3000h	0	U16	Digital Filter Active	1 = ON
3001h	0	F32	Digital Filter Coefficient	10.0

Uxx = UNSIGNED
Ixx = SIGNED
Fxx = FLOAT
Name = Name of the object

© Fritz Kübler GmbH, subject to errors and changes. 06/2026

For static applications
1- and 2-axis measurement | **IN48** | **Fieldbus / SAEJ1939**

Interface characteristics SAE J1939

General information concerning SAE J1939

The protocol J1939 originates from the international Society of Automotive Engineers (SAE) and operates on the physical layer with high speed CAN as per ISO11898. The application emphasis lies in the area of the power train and chassis of commercial vehicles. It serves to transfer diagnostic data (for example, motor speed, position, temperature) and control information. The inclinometers IN88 support the total functionality of J1939.

This protocol is a multimaster system with decentralized network management that does not involve channel-based communication.

It supports up to 254 logic nodes and 30 physical control devices per segment. The information is described as parameters (signals) and combined on 4 memory pages (data pages) into parameter groups (PGs). Each parameter group can be identified via a unique number, the parameter group number (PGN). Independently of this, each signal is assigned a unique SPN (suspect parameter number).

The major part of the communication occurs cyclically and can be received by all control devices without the explicit request for data (Broadcast). Furthermore the parameter groups are optimized to a length of 8 data bytes. This enables very efficient utilization of the CAN protocol. If greater amounts of data need to be transferred, then transport protocols (TP) can be used: BAM (broadcast announce message) and CMDT (connection mode data transfer). With BAM TP the transfer of data occurs as a broadcast.

Inclinometer implementation SAE J1939

- PGNs that are adaptable to the customer's application.
- Resolution of address conflicts -> Address Claiming (ACL).
- Continuous checking whether control addresses have been assigned twice within a network.
- Change of control device addresses during run-time.
- Unique identification of a control device with the help of a name that is unique worldwide. This name serves to identify the functionality of a control device in the network.
- Predefined PGs for position, speed and alarm.
- 250 kbit/s, 29 bit identifier.
- Watchdog controlled device.

A two-color LED signals the operating and fault status of the SAE J1939 protocol, as well as the status of the internal diagnostics.

Characteristics SAE J1939

Interface	CAN high-speed acc. to ISO 11898, CAN specification 2.0 B
Baud rate	250 kbit/s, switchable by software to 500 kbit/s
Node address	software configurable
Termination switchable	software configurable

Terminal assignment

Interface	Type of connection	1 x M12 connector, 5-pin					
3	2		Bus IN				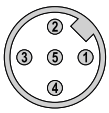
		Signal:	+V	0 V	CAN_GND	CAN_H	CAN_L
		Pin:	2	3	1	4	5

Interface	Type of connection	Cable					
3	4, B		Bus IN				
		Signal:	+V	0 V	CAN_GND	CAN_H	CAN_L
		Core color:	BN	WH	GY	GN	BU

© Fritz Kübler GmbH, subject to errors and changes. 06/2026

For static applications 1- and 2-axis measurement	IN48	Fieldbus / SAEJ1939

Interface characteristics SAE J1939

Configuration data signals PG

Configuration data	Data length in byte	Hex value	Hex value in decimal	Endian hex value
INCLIN_CFG_Resolution	2	0x0064	100	0x6400
INCLIN_CFG_LongOperatingPar	1	0x02	2	0x02
INCLIN_CFG_SlopeLongPreset_Activate	1	0x01	1	0x01
INCLIN_CFG_SlopeLongPresetValue	2	0x0000	0	0x0000
INCLIN_CFG_LatOperatingPar	1	0x02	2	0x02
INCLIN_CFG_SlopeLatPreset_Activate	1	0x01	1	0x01
INCLIN_CFG_SlopeLatPresetValue	2	0x0000	0	0x0000
INCLIN_CFG_TxCycleTime	2	0x0032	50	0x3200
INCLIN_CFG_NodeID	1	0x20	32	0x20
INCLIN_CFG_BitRate	1	0x00	0	0x00
INCLIN_CFG_CAN_Termination	1	0x01	1	0x01
INCLIN_CFG_FilterConfig	1	0x06	6	0x06

© Fritz Kübler GmbH, subject to errors and changes. 06/2026

For static applications
1- and 2-axis measurement | **IN48** | **Fieldbus / Modbus**

Interface characteristics Modbus

General information on Modbus

Modbus communication profile V 1.02

Node number, baud rate and bus termination programmable.

Modbus application protocol V1.1b3

Characteristics Modbus

Interface	Modbus V1.02
Protocol	Modbus RTU V1.1b3
Baud rate	4800 ... 115200 kbit/s, software configurable
Node address	1 ... 63, software configurable
Termination	software configurable

Read Holding Register – Function code 03 [1)]

Reg.	Object	Format	Value	Default
001	ANGLE OF INCL. X-AXIS	I16	Inclination angle in 0.01 °	-85.00 ... +85.00
002	ANGLE OF INCL. Y-AXIS	I16	Rotation angle in 0.01 °	-85.00 ... +85.00
003	EULER ANGLE X-AXIS	I16	Euler angle (1 axis)	0 ... 180.99°
004	EULER ANGLE Y-AXIS	U16	Euler angle (1 axis)	0 ... 359.99°
007	SUPPLY VCC	U16	VCC in 0.1 VDC	240
008	TEMPERATURE IN 0.1°C	U16	Temp. in 0.1°	210
016	SIDEVIEW	U16	Back = 0, Front = 1	0
023	SYSTEM STATE	U16	No errors = 0	0
140	BAUD RATE	U16	Current baud rate	19200 Baud (2)
144	NODE-ID	U16	Current node address	63
145	TERMINATION	U16	Termination on/off	2 (on)
146	FILTER ACTIVATION	U16	Filter on/off	1 (on)
147	FILTER SETTING	F32	Filter value in HZ	5.0
148	SERIAL NUMBER	U32	Serial number	9YYDDDXXXXX
149	PRODUCT CODE	U32	Device type	x48616100
150	RESOLUTION	U16	Resolution X/Y axis	0.01° (10)
151	OPERATING PARAMETER	U16	Setting X axis	0
152	PRESET X-AXIS	U16	Preset X axis	0
153	OFFSET X-AXIS	U16	Offset X axis	0
154	DIFF.OFFSET X-AXIS	U16	Differential offset	0
155	Operating Parameter	U16	Setting Y axis	0
156	PRESET Y-AXIS	U16	Preset Y axis	0
157	OFFSET Y-AXIS	U16	Offset Y axis	0
158	DIFF.OFFSET Y-AXIS	U16	Differential offset	0
159	OFFSET EULER ANGLE	U16	Offset Euler axis Y	0

Write Holding Register – Function code 16 (0x10)

Reg.	Value	Format	Content	Default
300	VAR	U16	Baud rate	19200 Baud (2)
301	VAR	U16	Parity	1 = none
302	VAR	U16	Stoppbit	1 = 1 Stoppbit
304	VAR	U16	Node Number	0x3F (63d)
305	VAR	U16	Termination	2 = ON
306	VAR	U16	Digital Filter Active	1 = ON
307	VAR	F32	Digital Filter Coefficient	5.0
310	VAR	U16	Resolution of axis	10
311	VAR	U16	Slope long16 operating parameter	0
312	VAR	I16	Slope long16 preset value	0
313	VAR	I16	Slope long16 offset	0
314	VAR	I16	Differential Slope long16 offset	0
315	VAR	U16	Slope lateral16 operating parameter	0
316	VAR	I16	Slope lateral16 preset value	0
317	VAR	I16	Slope lateral16 offset	0
318	VAR	I16	Differential Slope lateral16 offset	0
320	VAR	U16	Preset Euler axis (only 0)	0
261	VAR	U16	Delaytime for Transmission	1
360	VAR	U16	Save All Application Parameters	0x1010
361	VAR	U16	Load All Parameters (Factory default)	0x10101

Terminal assignment

Interface	Type of connection	1 x M12 connector, 5-pin					
6	2		Bus IN				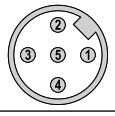
		Signal:	+V	0 V	D0	D1	TG
		Pin:	2	3	5	4	1

Interface	Type of connection	Cable					
6	4, B		Bus IN				
		Signal:	+V	0 V	D0	D1	TG
		Core color:	BN	WH	BU	GN	GY

1) Reads the binary contents of holding registers (4XXX references) in the encoder slave. Broadcast is not supported.

© Fritz Kübler GmbH, subject to errors and changes. 06/2026