R1G133-AA17-02

EC centrifugal fan

backward curved, single inlet



ebm-papst Mulfingen GmbH & Co. KG
Bachmühle 2 · D-74673 Mulfingen
Phone +49 7938 81-0
Fax +49 7938 81-110
info1@de.ebmpapst.com
www.ebmpapst.com

Limited partnership · Headquarters Mulfingen
County court Stuttgart · HRA 590344

General partner Elektrobau Mulfingen GmbH · Headquarters Mulfingen
County court Stuttgart · HRB 590142

Nominal data

Type	**R1G133-AA17-02**	
Motor	**M1G055-BD**	
Nominal voltage	VDC	24
Nominal voltage range	VDC	16 .. 28
Type of data definition		fa
Speed (rpm)	min^{-1}	3900
Power input	W	28
Current draw	A	1.3
Min. ambient temperature	°C	-25
Max. ambient temperature	°C	60

ml = Max. load · me = Max. efficiency · fa = Running at free air · cs = Customer specs · cu = Customer unit
Subject to alterations

EC centrifugal fan

backward curved, single inlet

Technical features

Mass	0.65 kg
Size	133 mm
Motor size	55
Surface of rotor	Thick layer passivated
Material of electronics housing	Die-cast aluminium
Material of impeller	Plastic PA66, fibreglass-reinforced
Number of blades	7
Direction of rotation	Clockwise, seen on rotor
Type of protection	IP20
Insulation class	"B"
Humidity (F) / environmental protection class (H)	F0; H0 - dry environment
Max. permissible ambient motor temp. (transp./ storage)	+80 °C
Min. permissible ambient motor temp. (transp./storage)	-40 °C
Mounting position	Any
Condensation drainage holes	Rotor-side
Operation mode	S1
Motor bearing	Ball bearing
Technical features	- Control input 0-10 VDC / PWM - Tach output - Motor current limit - Soft start
EMC interference immunity	Acc. to EN 61000-6-2 (industrial environment)
EMC interference emission	Acc. to EN 61000-6-3 (household environment)
Motor protection	Reverse polarity and locked-rotor protection
Cable exit	Variable
Approval	UL 1004-1; CSA C22.2 no. 77; EAC

ebm-papst Mulfingen GmbH & Co. KG · Bachmühle 2 · D-74673 Mulfingen · Phone +49 (0) 7938 81-0 · Fax +49 (0) 7938 81-110 · info1@de.ebmpapst.com · www.ebmpapst.com

EC centrifugal fan

backward curved, single inlet

Product drawing

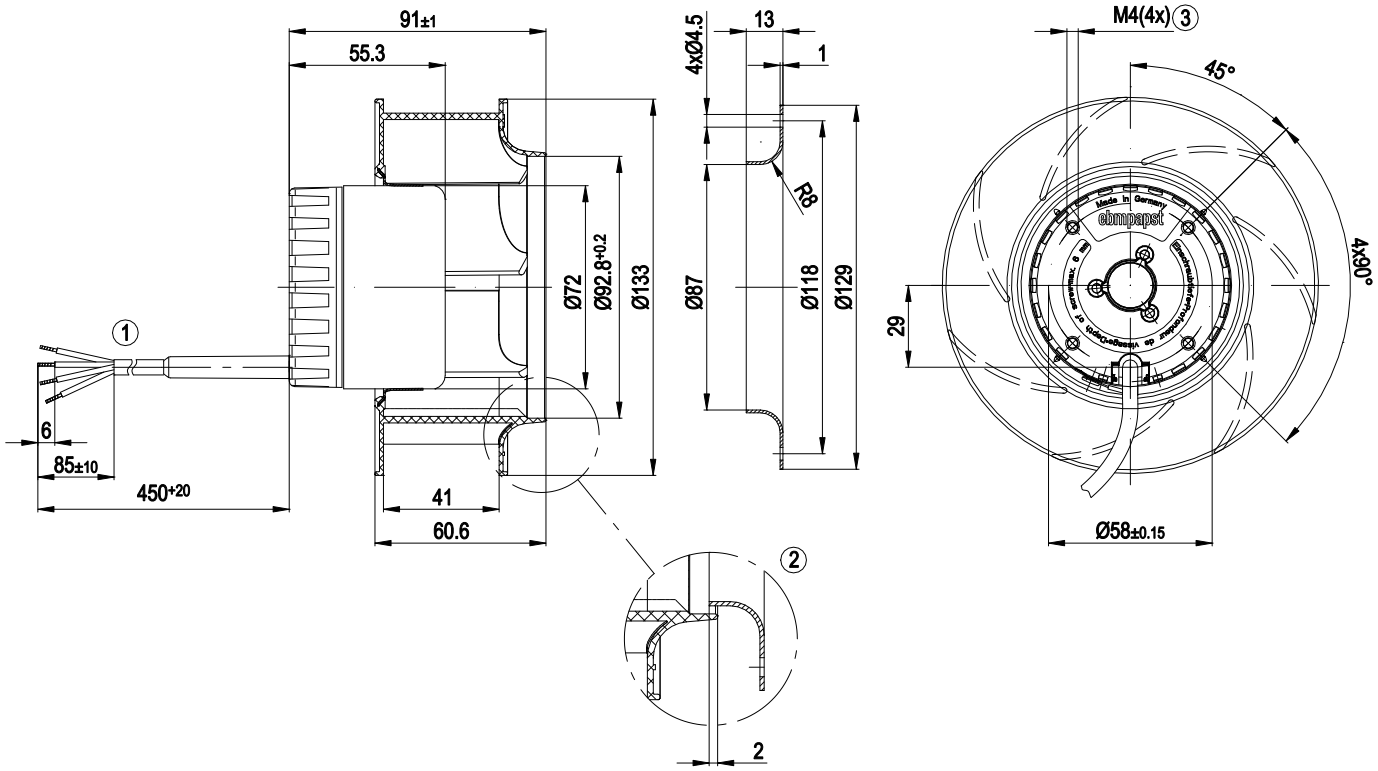

1	Connection line AWG20; 4 x brass lead tips crimped
2	Accessory part: Inlet nozzle 09566-2-4013, not included in the standard scope of delivery
3	Depth of screw max. 6 mm

ebm-papst Mulfingen GmbH & Co. KG · Bachmühle 2 · D-74673 Mulfingen · Phone +49 (0) 7938 81-0 · Fax +49 (0) 7938 81-110 · info1@de.ebmpapst.com · www.ebmpapst.com

EC centrifugal fan

backward curved, single inlet

Connection screen

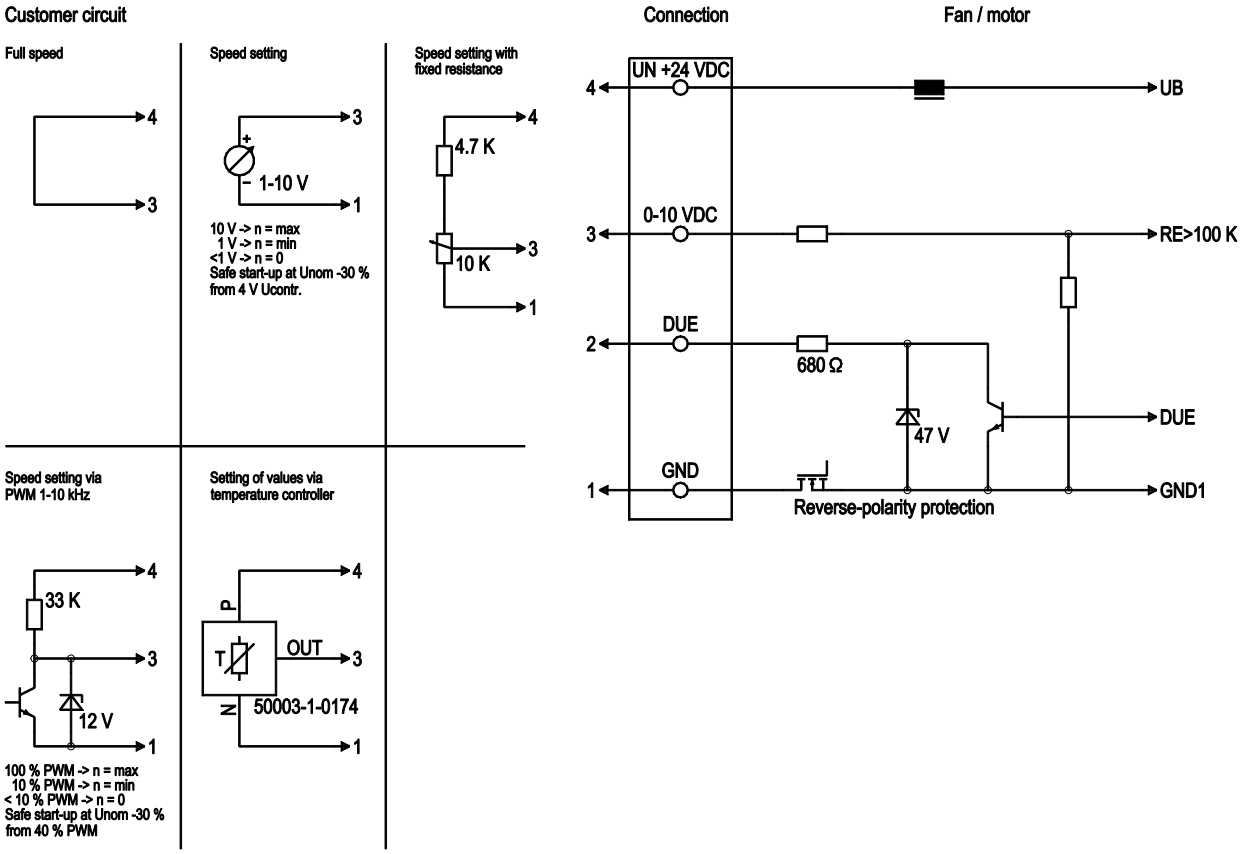

No.	Conn.	Designation	Colour	Function / assignment
1	1	GND	blue	Reference mass
1	2	Tach	white	Speed monitoring output, 2 pulses per rotation, Isink max = 10 mA
1	3	0-10 VDC	yellow	Control input Re > 100 K
1	4	Un +24 VDC	red	Power supply 24 VDC, residual ripple 3.5 %

ebm-papst Mulfingen GmbH & Co. KG · Bachmühle 2 · D-74673 Mulfingen · Phone +49 (0) 7938 81-0 · Fax +49 (0) 7938 81-110 · info1@de.ebmpapst.com · www.ebmpapst.com

EC centrifugal fan

backward curved, single inlet

Charts: Air flow

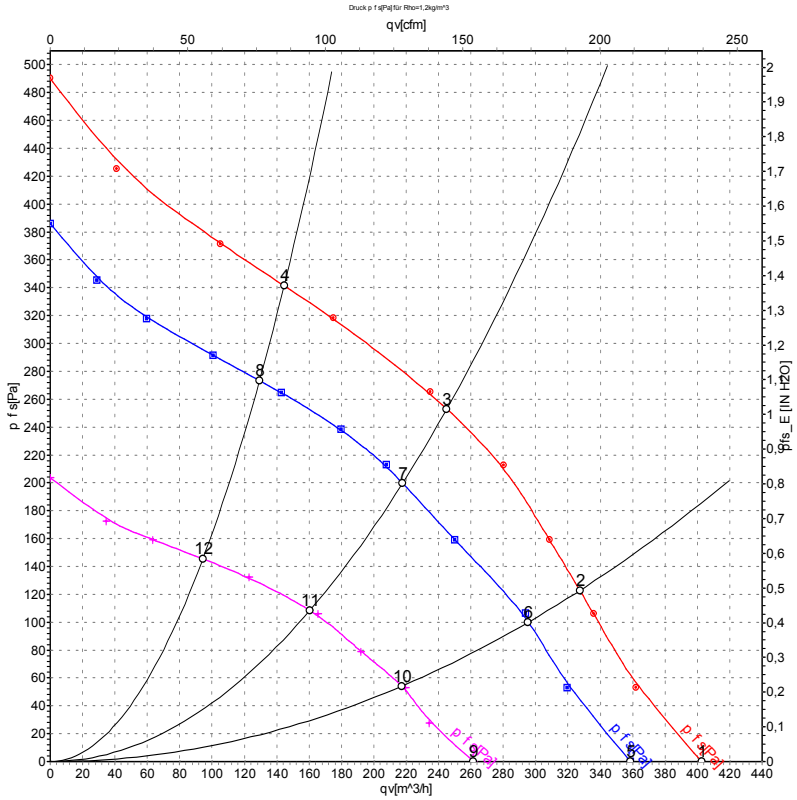

Measurement: LU-54690-1
Measurement: LU-54689-1
Measurement: LU-54691-1

Air performance measured as per ISO 5801 Installation category A. For detailed information on the measuring set-up, please contact ebm-papst. Suction-side noise levels: LwA measured as per ISO 13347 / LpA measured with 1m distance to fan axis. The values given are valid under the measuring conditions mentioned above and may vary according to the actual installation situation. With any deviation from the standard set-up, the specific values have to be checked and reviewed with the unit installed.

Measured values

	U	n	P_{ed}	I	q_V	p_{fs}	q_V	p_{fs}
	V	min^{-1}	W	A	m^3/h	Pa	cfm	in. wg
1	28	4345	36	1.43	405	0	235	0.00
2	28	4170	40	1.60	325	123	190	0.49
3	28	4155	41	1.61	245	253	145	1.02
4	28	4255	38	1.51	145	342	85	1.37
5	24	3900	28	1.30	360	0	210	0.00
6	24	3725	30	1.39	295	100	175	0.40
7	24	3710	30	1.40	220	200	130	0.80
8	24	3800	28	1.32	130	275	75	1.10
9	16	2830	11	0.88	260	0	155	0.00
10	16	2750	13	0.95	215	55	130	0.22
11	16	2745	13	0.95	160	109	95	0.44
12	16	2795	12	0.91	95	145	55	0.58

U = Supply voltage · n = Speed (rpm) · P_{ed} = Power input · I = Current draw · q_V = Air flow · p_{fs} = Pressure increase

ebm-papst Mulfingen GmbH & Co. KG · Bachmühle 2 · D-74673 Mulfingen · Phone +49 (0) 7938 81-0 · Fax +49 (0) 7938 81-110 · info1@de.ebmpapst.com · www.ebmpapst.com