E12751

Connecting cable with socket

ADOGH080VAS0010G08

For 8-pole sockets the core colours are not standardised.
Please note the wiring of the sensor and the sockets (see data sheet).

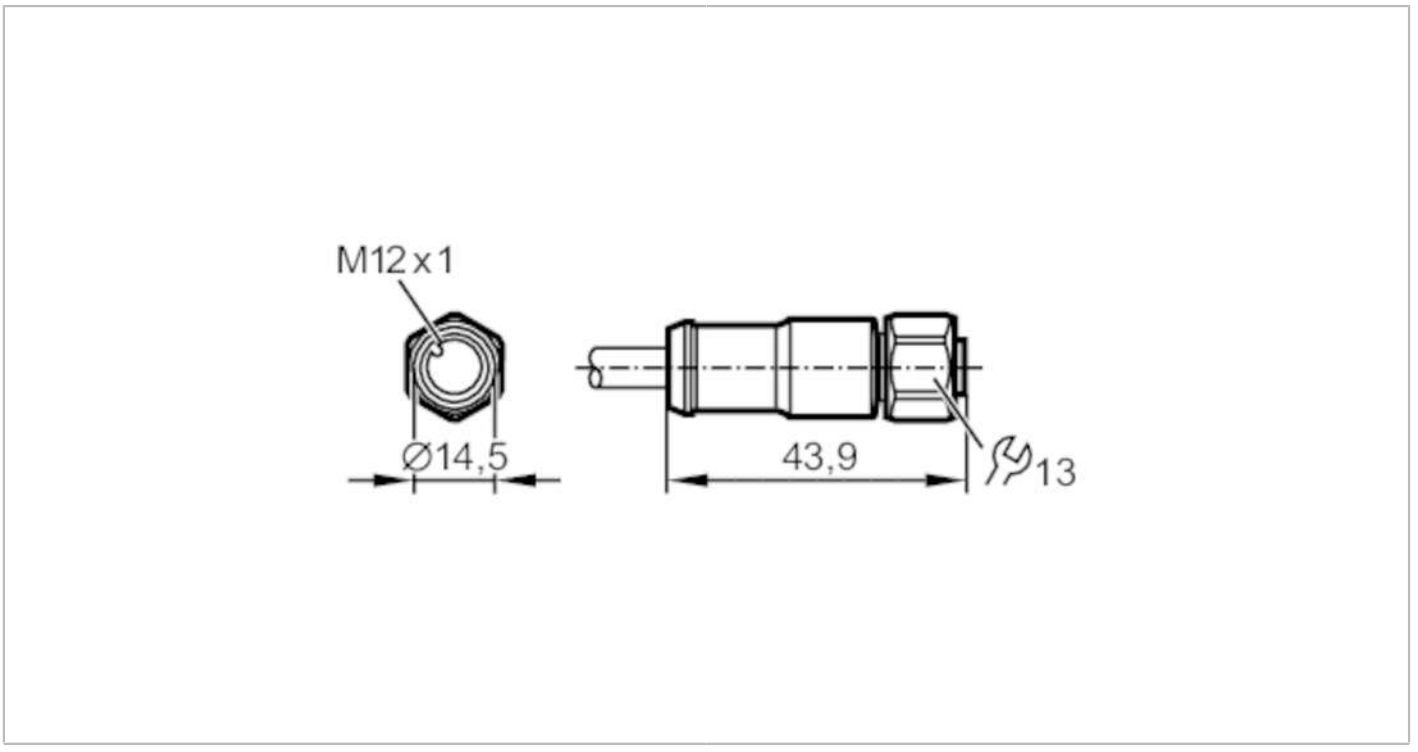

Application		
Special feature		Screened cable
Electrical data		
Operating voltage	[V]	< 30 AC/DC
Protection class		III
Operating conditions		
Ambient temperature	[°C]	-25...80
Protection		IP 67
Mechanical data		
Weight	[g]	712.4
Dimensions	[mm]	26.5 x 15 x 38.5
Materials		PVC; PUR
Moulded-body material		PUR
Material nut		stainless steel
Remarks		
Pack quantity		1 pcs.

E12751

Connecting cable with socket

ADOGH080VAS0010G08

Electrical connection

Cable: 10 m, PVC, orange, Ø 6.6 mm, shielded; 8 x 0.25 mm² (14 x Ø 0.15 mm)

Electrical connection - socket

Connector: 1 x M12, straight; coding: A; Moulded body: PUR, black; Locking: stainless steel; Tightening torque: 0.7...0.9 Nm; Shielded connection cable: screen connected



Connection

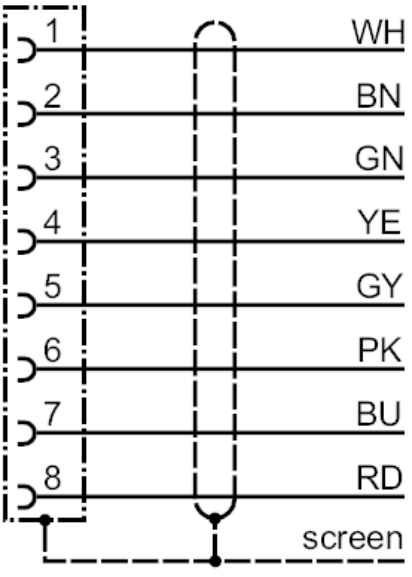

	colours to DIN 47100
	Core colours :
BN =	brown
BU =	blue
GN =	green
GY =	grey
PK =	pink
RD =	red
WH =	white
YE =	yellow
screen =	screen