LEGA SERIES

LOW-DEPTH, HYDRAULIC-MAGNETIC CIRCUIT BREAKERS

Developed to meet the evolving demand for low-profile data center rack power distribution units, the Airpax™ LEGA series circuit breaker provides a cost effective solution with uncompromising performance and reliability in a low-depth package. The UL-489 Listed product includes TÜV certification to EN60947-2 for global acceptance in UL62368 and EN62368 ITE applications, a variety of limited access actuator styles and secure screw terminals oriented for ease of assembly and efficient power conductor routing.



Features

- Retains proven high performance specifications & reliability of the Airpax™ LEG series
- Low-depth design to minimize PDU intrusion into equipment rack space
- Rear access screw terminals provide secure vibration resistant connection for high reliability applications
- Terminal orientation allows simple power conductor routing and ease of assembly
- Global agency certifications for UL62368 and EN62368 ITE requirements
- Short toggle and flat rocker actuators available for protection against accidental "turn-off
- Barriers fold-away to allow easier screw acces

SPECIFICATIONS

Agency Certification	Poles	Maximum Voltage	Rated Amperage	Short Circuit Amperage	
UL 489	2	120/240VAC @ 50/60Hz	1-30A	5000A	
TÜV (EN60947-2)	1	250VAC @ 50/60 Hz	1-30A	Ics	Icu
				3000A	3000A
	2	250VAC @ 50/60 Hz	1-30A	3000A	5000A

Copyright © 2025 Sensata Technologies Inc.

CONFIGURATIONS - TOGGLE HANDLE

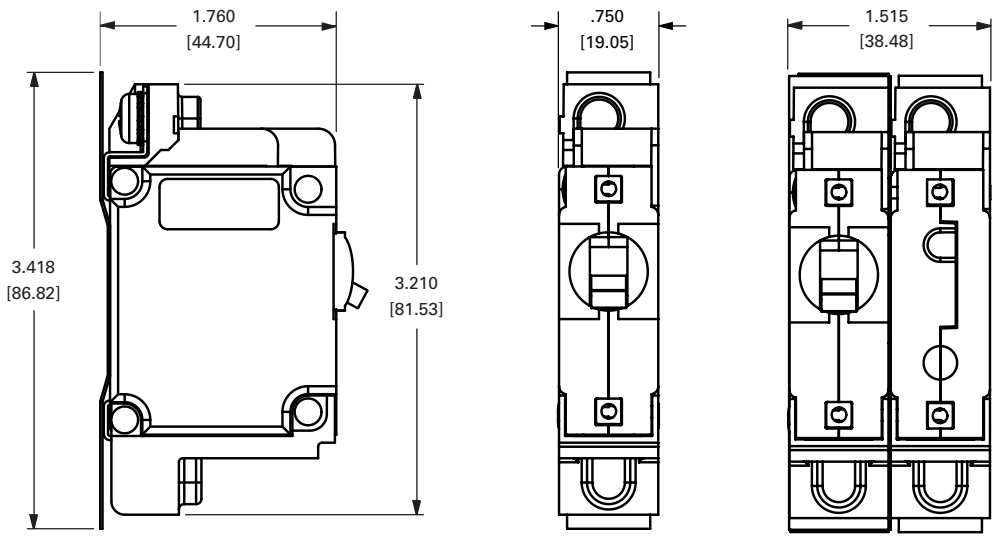

Single Pole, Toggle Handle

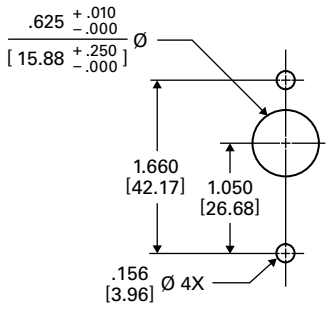

Two Pole, Single Toggle Handle

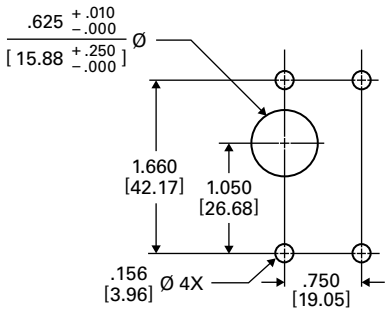

Two Pole, Two Toggle Handles

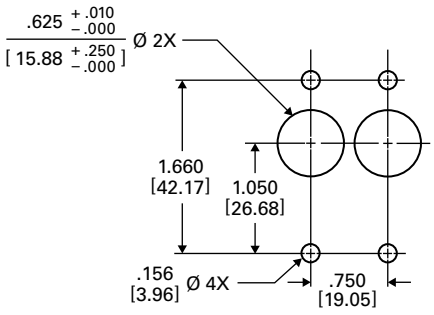

Panel Mounting Detail: Tolerance for Mtg. ± .005 [.13] unless noted.

Copyright © 2025 Sensata Technologies Inc.

CONFIGURATIONS - BX & ZX ROCKER HANDLES

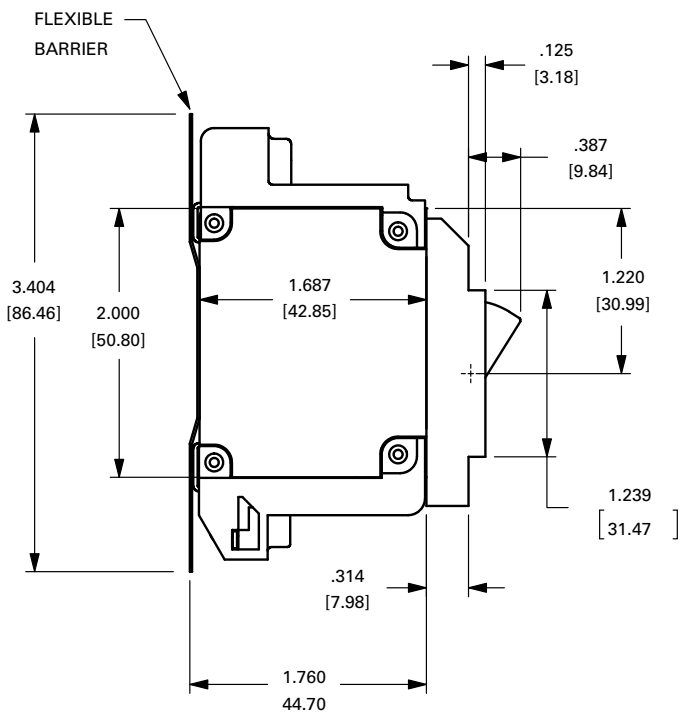

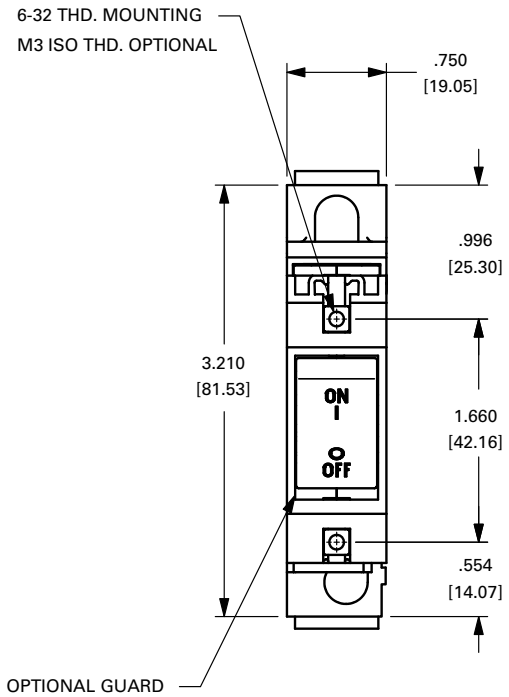

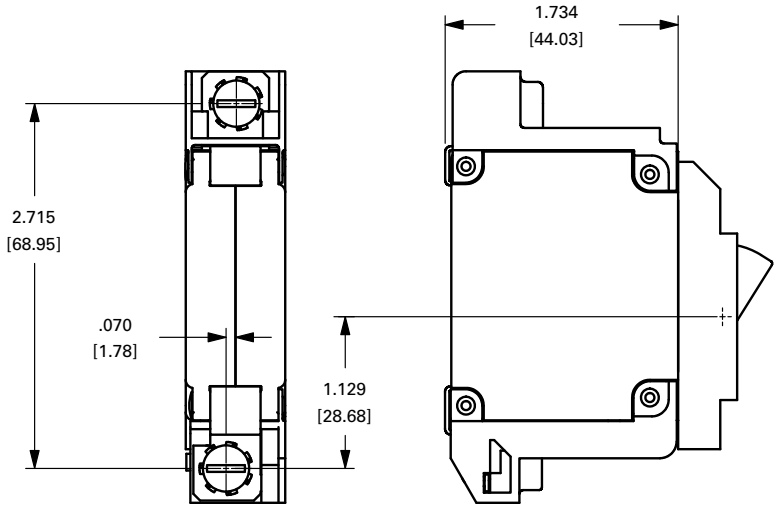

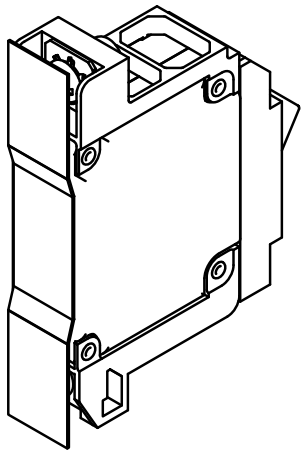

Note: Barrier removed for clarity

Copyright © 2025 Sensata Technologies Inc.

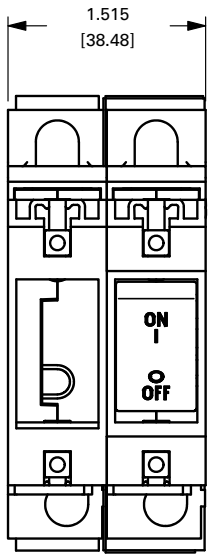

TWO POLE
(OPTIONAL, HANDLE MAY BE
IN POLE 2 INSTEAD OF POLE 1)

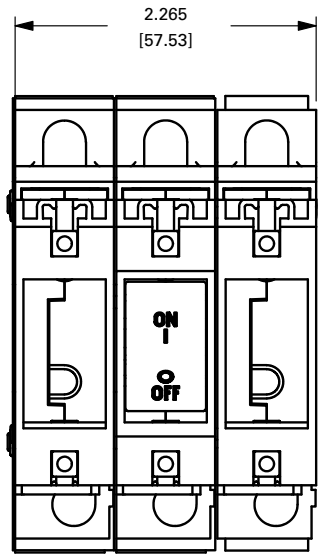

THREE POLE

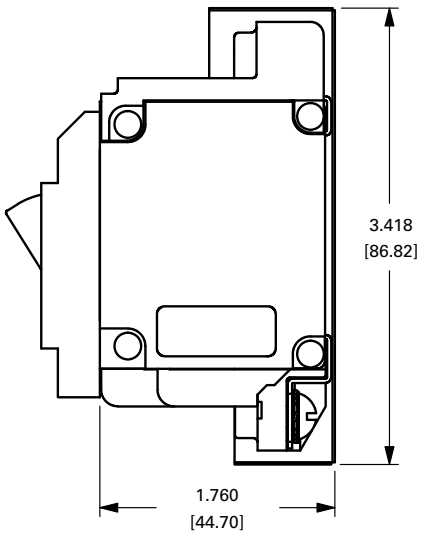

Single Pole, Rocker Handle

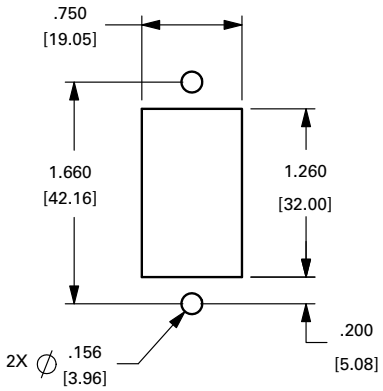

SINGLE POLE

Two Pole, Rocker Handle

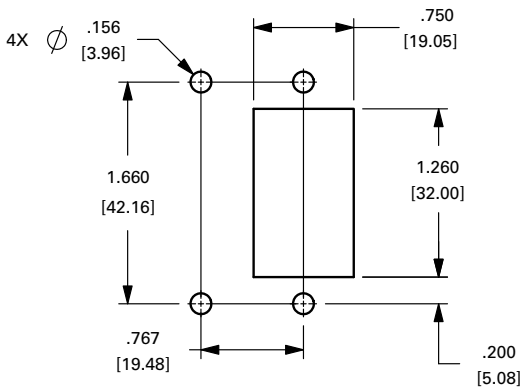

TWO POLE

Three Pole, Rocker Handle

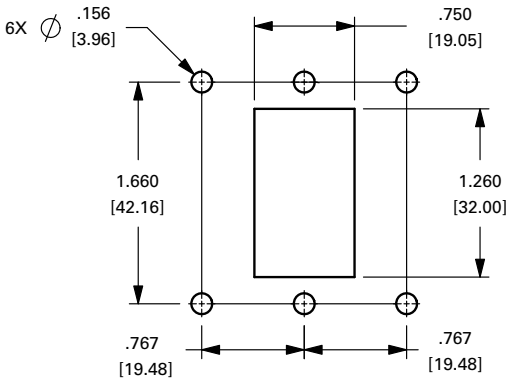

THREE POLE

Panel Mounting Detail: Tolerance for Mtg. ± .005 [.13] unless noted.

Copyright © 2025 Sensata Technologies Inc.

AIRPAX®

DELAY CURVES

DC Short Delay

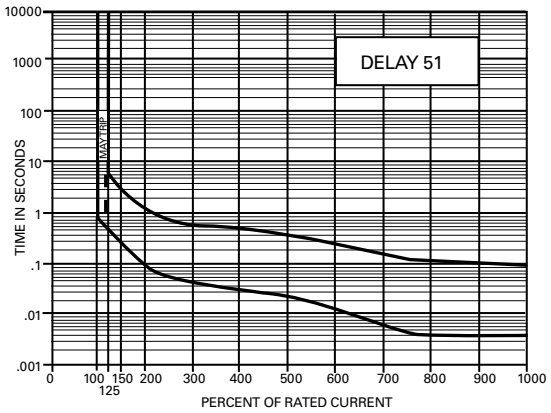

50/60Hz Short Delay

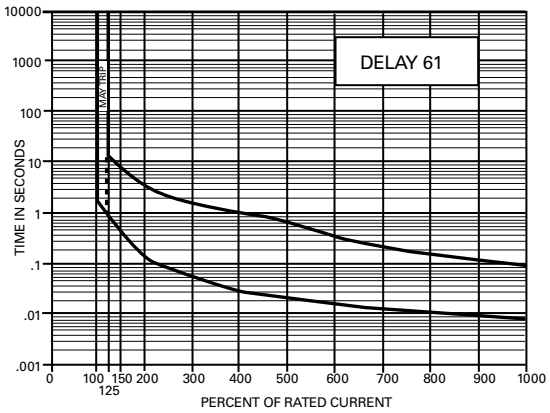

DC Medium Delay

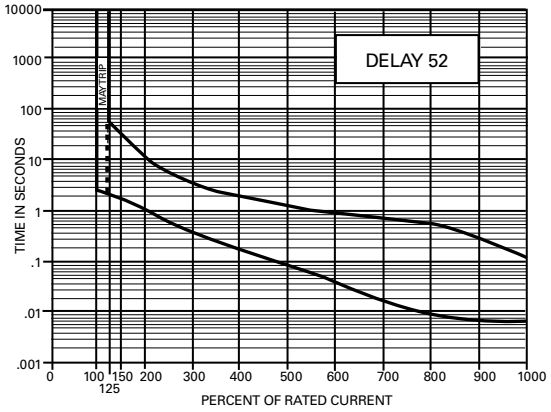

50/60Hz Medium Delay

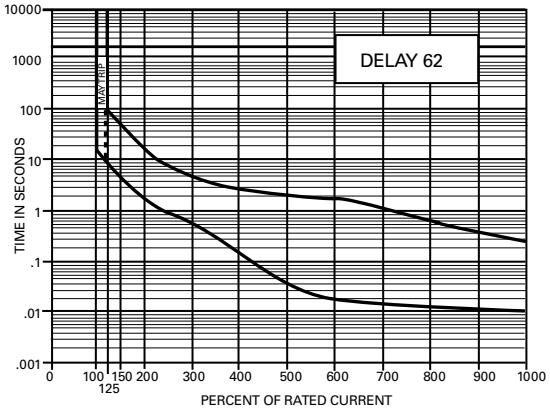

DC Long Delay (Motor Start)

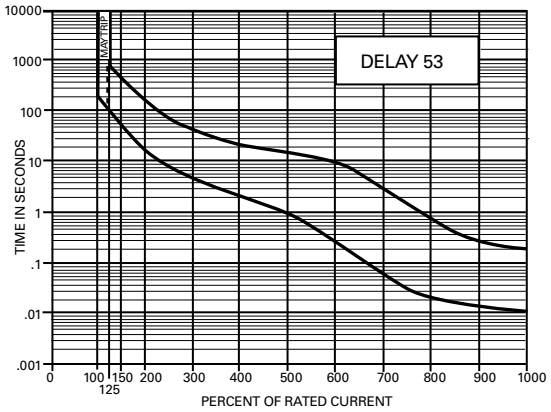

50/60Hz Long Delay (Motor Start)

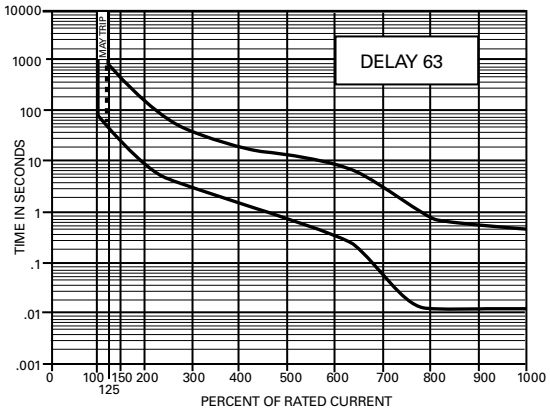

Copyright © 2025 Sensata Technologies Inc.

OPERATING CHARACTERISTICS - SERIES TRIP

The most popular configuration for hydraulic-magnetic circuit breakers in the series trip, where the sensing coil and contacts are in series with the load being protected. The handle position conventiently indicates circuit status. In addition to providing conventional over-current protection, it's simultaneously used as an ON-OFF switch.



Percentage of Rated Current vs. Trip Time in Seconds at +25°C (Vertical Mount)								
Delay	**100%**	**125%**	**150%**	**200%**	**400%**	**600%**	**800%**	**1000%**
51	No Trip	.500 to 6.5	.300 to 3.0	.100 to 1.2	.031 to .500	.011 to .25	.004 to .1	.004 to .08
52	No Trip	2 to 60	1.8 to 30	1 to 10	.15 to 2.0	.04 to 1	.008 to .5	.006 to .1
53	No Trip	80 to 700	40 to 400	15 to 150	2 to 20	.23 to 9	.018 to .55	.012 to .2
61	No Trip	.700 to 12	.35 to 7.0	.130 to 3.0	.030 to 1	.015 to .3	.01 to .15	.008 to .1
62	No Trip	10 to 120	6 to 60	2 to 20	.2 to 3.0	.02 to 2	.015 to .8	.01 to .25
63	No Trip	50 to 700	30 to 400	10 to 150	1.5 to 20	.4 to 10	.013 to .85	.013 to .5

Inrush Pulse Tolerance	
Delay	**Pulse Tolerance**
61, 62, 63	10 times rated current (approx.)
61F, 62F, 63F	12 times rated current (approx.)

The table aboce provides a comparison of inrush pulse tolerance with and without the intertial delay feature for each of the 50/60Hz delays. Pulse tolerance is defined as a single pulse of half sine wave peak current amplitude of 8 milliseconds duration that will not trip the circuit breaker. Consult Sensata Technologies for further assistance.

Typical Resistance/Impedance		
Current Ratings (Amps)	**Impedence**	
	DC (ohms)	**AC, 50/60Hz**
	51, 52, 53	**61, 62, 63**
0.200	36.6	34.2
1.00	1.38	1.47
2.00	0.31	0.25
5.00	0.052	0.051
10.0	0.016	0.013
20.0	0.006	0.005
30.0	0.0027	0.0026
50.0	0.0019	-

DCR and Impedance based on 100% rated current applied and stabalized for a minimum of one hour. Tolerance .05-2.5 amperes ± 20%: 2.6 - 20 amperes ± 25%, 21-50 amperes ± 50%. Consult factory for special values and for coil impedance of delays not shown.

Copyright © 2025 Sensata Technologies Inc.

ORDERING OPTIONS

Example : LEGBXA 66-1-62-20.0-AG-M6-T

Two Pole (One Handle per Pole), Two Pole, -1 Series, 50/60 Short Delay, 20 amps, "All Copper" Option/10kAIC, Black with White Markings

LEGBXA – 66 – 1 – 62 – 20.0 – AG – M6 T

Type & Handle
See following charts.

Poles & Terminals
See following charts.

Internal Configuration
See following charts.

Frequency & Delay
See following charts.

Rated Current
See following charts.

Additional Options
See following charts.

Approvals
See following charts.

Handle Colors, Indicators & Markings
See following charts.

1. Type & Handle			
Step 1a		**Step 1b**	
LEG	One handle per unit	**A**	Standard toggle & mounting, Low depth construction
LEGH	One handle per pole	**ZXA***	ZX Rocker with integral mounting, Low depth construction
LMG	One handle per unit, mid-trip	**BXA***	BX flat rocker with integral mounting, Low depth construction
LMGH	One handle per pole, mid-trip	** All types are UL-489 Listed * Rockers can not have option "H", a handle per pole (for example LEGHZXA or LMGHBZA is incorrect)	

2. Poles & Terminals	
6	Single Pole, Screw Terminals
66	Two Poles, Screw Terminals
666	Three Poles, Screw Terminals

3. Internal Configuration	
1	Series

4. Frequency & Delay			
Step 4a		**Step 4b**	
SW	Switch only		Standard
51	DC short display	**F**	Inertial wheel
52	DC medium display		
53	DC long delay		
61	50/60Hz short delay		
62	50/60Hz medium delay		
63	50/60Hz long delay (motor start)		

All delays can add an optional inertial wheel by adding an "F" to the end of the code
Example: 61 becomes 61F

5. Rated Current	
1.0	1 amp
5.0	5 amp
7.5	7.5 amp
10.0	10 amp
12.5	12.5 amp
15.0	15 amp
16.0	16 amp
20.0	20 amp
25.0	25 amp
30.0	30 amp
40.0	40 amp***
50.0	50 amp***

*** Ratings over 30 amps only available with DC delay characteristics
Other ratings available upon request

Copyright © 2025 Sensata Technologies Inc.

AIRPAX®

6. Additional Options	
	Standard hardware, no options required
A	Metric thread mounting inserts and terminal hardware
G	Hand guard (available for ZX & BX versions only)
M	Handle in opposite pole (2-pole only)
Q	APG/UPG style “fat” toggle actuator
X	Handle guard with no actuation feature (BX only, no mid-trip)

7. Handle Colors, Indicators & Markings

Toggle Handle

Unmarked	Marked ON - OFF I - O	Handle Color	Unmarked	Marked ON - OFF I - O	Handle Color	Unmarked	Marked ON - OFF I - O	Handle Color	Unmarked	Marked ON - OFF I - O	Handle Color
.00	-.01	Black	-10	-11	Yellow	-20	-21	Red	-.30	-.31	Blue
-.40	-.41	Green	-60	-61	Orange	-90	-91	White			

ZX Rocker Handle (Single-Color Rocker)

Unmarked	Vertical Mount ON - OFF (fig 1)	Vertical Mount I - O (fig 2)	Vertical Mount ON - OFF I - O (fig 3)	Horizontal Mount ON - OFF (fig 4)	Horizontal Mount I - O (fig 5)	Horizontal Mount ON - OFF I - O (fig 6)
-00	-01	-02	-03	-04	-05	-06
-20	-21	-22	-23	-24	-25	-26
-40	-41	-42	-43	-44	-45	-46
-50	-51	-52	-53	-54	-55	-56
-90	-91	-92	-93	-94	-95	-96

Marking Detail

Handle Color	Indicating Color	Marking Color	Indicates
Black	-	White	-
Red	-	White	-
Gray	-	Black	-
Orange	-	Black	-
White	-	Black	-

ZX Rocker Handle (Two-Color Rocker)

Unmarked	Vertical Mount ON - OFF (fig 1)	Vertical Mount I - O (fig 2)	Vertical Mount ON - OFF I - O (fig 3)	Horizontal Mount ON - OFF (fig 4)	Horizontal Mount I - O (fig 5)	Horizontal Mount ON - OFF I - O (fig 6)
-A0	-A1	-A2	-A3	-A4	-A5	-A6
-B0	-B1	-B2	-B3	-B4	-B5	-B6
-C0	-C1	-C2	-C3	-C4	-C5	-C6
-F0	-F1	-F2	-F3	-F4	-F5	-F6
-G0	-G1	-G2	-G3	-G4	-G5	-G6
-H0	-H1	-H2	-H3	-H4	-H5	-H6
-J0	-J1	-J2	-J3	-J4	-J5	-J6
-K0	-K1	-K2	-K3	-K4	-K5	-K6
-L0	-L1	-L2	-L3	-L4	-L5	-L6

Marking Detail A & B

Handle Color	Indicating Color	Marking Color	Indicates
Black	White	White	ON
Black	Red	White	ON
Black	Green	White	ON
Black	White	White	OFF
Black	Red	White	OFF
Black	Green	White	OFF
Black	White	White	ON
Black	Red	White	ON
Black	Green	White	ON

Copyright © 2025 Sensata Technologies Inc.

AIRPAX®

BX Rocker Handle (Two-Color Rocker)							Marking Detail C			
Unmarked	**Vertical Mount ON - OFF (fig 1)**	**Vertical Mount I - O (fig 2)**	**Vertical Mount ON - OFF I - O (fig 3)**	**Horizontal Mount ON - OFF (fig 4)**	**Horizontal Mount I - O (fig 5)**	**Horizontal Mount ON - OFF I - O (fig 6)**	**Handle Color**	**Indicating Color**	**Marking Color**	**Indicates**
- M0	-	- M2	- M3	-	-	- M6	Black	White	White	OFF
- N0	-	- N2	- N3	-	-	- N6	Black	Red	Red	OFF
- P0	-	- P2	- P3	-	-	- P6	Black	Green	Green	OFF
- R0	0	- R2	- R3	-	-	- R6	Black	Yellow	Yellow	OFF

8. Approvals	
T	TUV approved Certified to EN60947-2 Includes the CE mark

Datasheets provided by Sensata Technologies, Inc., its subsidiaries and/or affiliates ("Sensata") are solely intended to assist third parties ("Buyers") who are developing systems that incorporate Sensata products (also referred to herein as "components"). Buyer understands and agrees that Buyer remains responsible for using its independent analysis, valuation, and judgment in designing Buyer's systems and products. Sensata datasheets have been created using standard laboratory conditions and engineering practices. Sensata has not conducted any testing other than that specifically described in the published documentation for a particular datasheet. Sensata may make corrections, enhancements, improvements, and other changes to its datasheets or components without notice.
Buyers are authorized to use Sensata datasheets with the Sensata component(s) identified in each particular datasheet. HOWEVER, NO OTHER LICENSE, EXPRESS OR IMPLIED, BY ESTOPPEL OR OTHERWISE TO ANY OTHER SENSATA INTELLECTUAL PROPERTY RIGHT, AND NO LICENSE TO ANY THIRD PARTY TECHNOLOGY OR INTELLECTUAL PROPERTY RIGHT, IS GRANTED HEREIN. SENSATA DATASHEETS ARE PROVIDED "AS IS". SENSATA MAKES NO WARRANTIES OR REPRESENTATIONS WITH REGARD TO THE DATASHEETS OR USE OF THE DATASHEETS, EXPRESS, IMPLIED, OR STATUTORY, INCLUDING ACCURACY OR COMPLETENESS. SENSATA DISCLAIMS ANY WARRANTY OF TITLE AND ANY IMPLIED WARRANTIES OF MERCHANTABILITY, FITNESS FOR A PARTICULAR PURPOSE, QUIET ENJOYMENT, QUIET POSSESSION, AND NON-INFRINGEMENT OF ANY THIRD PARTY INTELLECTUAL PROPERTY RIGHTS WITH REGARD TO SENSATA DATASHEETS OR USE THEREOF.
All products are sold subject to Sensata's terms and conditions of sale supplied at www.sensata.com SENSATA ASSUMES NO LIABILITY FOR APPLICATIONS ASSISTANCE OR THE DESIGN OF BUYERS' PRODUCTS. BUYER ACKNOWLEDGES AND AGREES THAT IT IS SOLELY RESPONSIBLE FOR COMPLIANCE WITH ALL LEGAL, REGULATORY, AND SAFETY-RELATED REQUIREMENTS CONCERNING ITS PRODUCTS, AND ANY USE OF SENSATA COMPONENTS IN ITS APPLICATIONS, NOTWITHSTANDING ANY APPLICATIONS-RELATED INFORMATION OR SUPPORT THAT MAY BE PROVIDED BY SENSATA.
Mailing Address: Sensata Technologies, Inc., 529 Pleasant Street, Attleboro, MA 02703, USA.

Copyright © 2025 Sensata Technologies, Inc.

Rev.01/29/2025

CONTACT US

Americas
508-236-2551
electrical-protection-sales@sensata.com
Europe, Middle East & Africa
+31743578156
info-sse@list.sensata.com
Asia Pacific
sales.isasia@list.sensata.com
China +86 (21) 2306 1500
Japan +81 (45) 277 7117
Korea +82 (31) 601 2004
India +91 (80) 67920890
Rest of Asia
+886 (2) 27602006 ext 2808