TP3237

TP- CEC -A-ZVG/US/

Evaluation systems

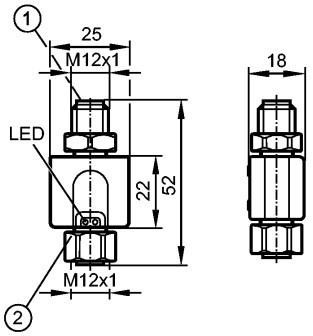

1: connection for voltage supply and output signals
2: connection for temperature sensor

Product characteristics			
Measured signal converter for temperature sensors			
for Pt100 and Pt1000 measuring elements			
Analog output 4...20 mA			
Measuring range: -50...300 °C / -58...572 °F			
Factory setting: 0...100 °C			
Electrical data			
Electrical design		DC	
Operating voltage	[V]	20...32 DC	
Protection class		III	
Reverse polarity protection		yes	
Outputs			
Output		Analog output 4...20 mA	
Output function		4...20 mA analog	
Short-circuit protection		yes (non-latching)	
Overload protection		yes	
Analog output		4...20 mA; Rmax: 300 Ω	
Measuring / setting range			
Measuring range		-50...300 °C	-58...572 °F
Factory setting		0...100 °C	
Accuracy / deviations			
Analog output	[K]	± 0.3 + (± 0.1 % MS)	
Temperature coefficients (in % of the span per 10 K)		0.1	
Measured value via IO-Link	[K]	± 0.3 + (± 0.1 % MS)	
Reaction times			
Power-on delay time	[s]	1	
Measuring / display cycle	[ms]	100	
Integrated watchdog		yes	
Interfaces			
IO-Link Device			
Transfer type		COM2 (38.4 kBaud)	
IO-Link revision		1.0	
Environment			

efector600

TP3237

TP- CEC -A-ZVG/US/

Evaluation systems

Ambient temperature	[°C]	-25...70
Storage temperature	[°C]	-40...85
Protection		IP 67

Tests / approvals

EMC		EN 61326-1
Shock resistance		DIN IEC 68-2-27: 50 g (11 ms)
Vibration resistance		DIN IEC 68-2-6: 20 g (10...2000 Hz)
MTTF	[Years]	449

Mechanical data

Housing materials		PA PACM 12 (TROGAMID); PET; sealing: FPM (Viton); nut: stainless steel 316L / 1.4404; connector: TPU (urethane)
Weight	[kg]	0.04

Electrical connection

Connection		M12 connector; gold-plated contacts

Wiring



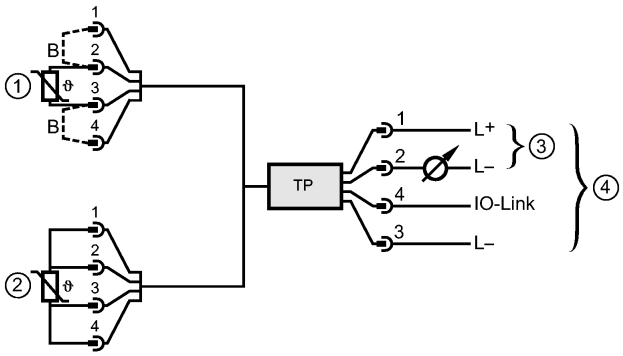

1: Two-wire sensor
2: Four-wire sensor
3: Operation as 2-wire temperature transmitter
4: Operation as 3-wire unit, IO-Link communication possible
B: bridge

Remarks

Remarks		cULus - Class 2 source required The measuring range can be scaled: -50... 300 °C / -58...572 °F MS = set measuring span
Pack quantity	[piece]	1