E12405

Y connection cable

YDOGH050MSS0,25H04STGH050MSS

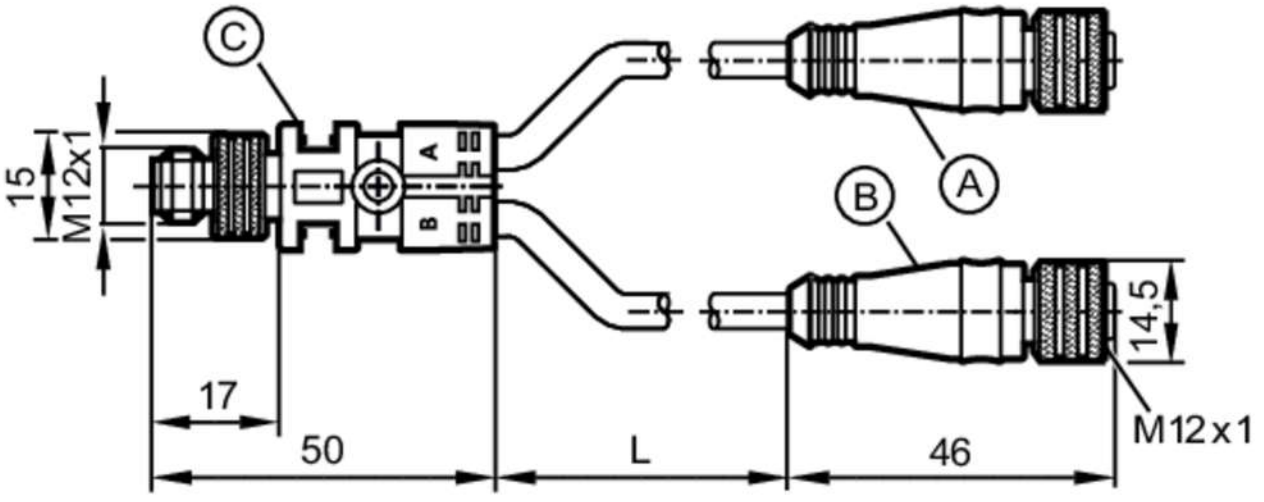

C - A input cable grey
C - B octavis cable black

Application		
Special feature		Halogen-free
Electrical data		
Operating voltage	[V]	10...30 DC
Max. current load total	[A]	4
Operating conditions		
Ambient temperature	[°C]	-25...90
Protection		IP 67
Mechanical data		
Weight	[g]	65
Materials		TPU
Moulded-body material		TPU
Material nut		brass, nickel-plated
Number of ports splitter box		2
Remarks		
Pack quantity		1 pcs.

E12405

Y connection cable

YDOGH050MSS0,25H04STGH050MSS

Electrical connection - plug

Cable: 0.25 m, PUR, Halogen-free, black, Ø 5.0 mm; 5 x 0.25 mm² (32 x Ø 0.1 mm)

Connector: 1 x M12, straight; coding: A; Moulded body: TPU; Locking: brass, nickel-plated

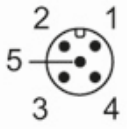

Connection

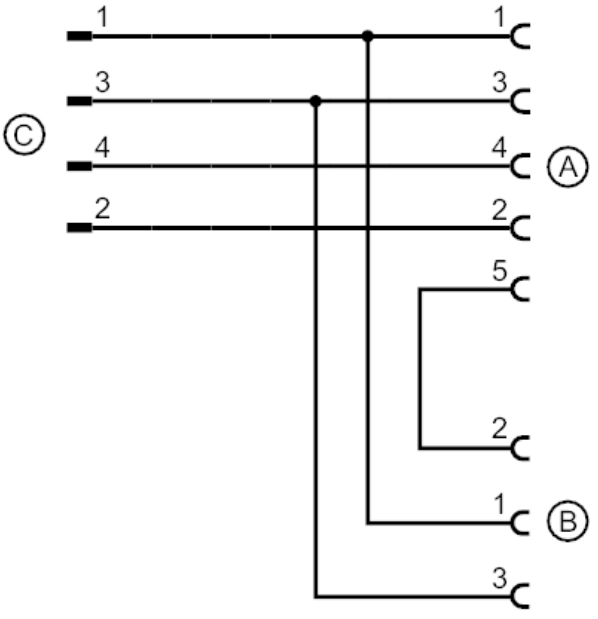

Electrical connection - socket

Cable: 0.25 m, PUR, Halogen-free, black, Ø 5.0 mm; 5 x 0.25 mm² (32 x Ø 0.1 mm)

Connector: 2 x M12, straight; coding: A; Moulded body: TPU; Locking: brass, nickel-plated

