3/2-shut-off valve, mechanically operated, Series AS5-BAV

R412009261

General series information
Series AS5

- The AVENTICS Series AS5 is a modular, versatile maintenance unit for universal application. This Series offers compact dimensions, is highly efficient, lightweight and easy-to-use. The AVENTICS Series AS guarantees reliability, safety, and efficiency with a simplified assembly and maintenance efforts.



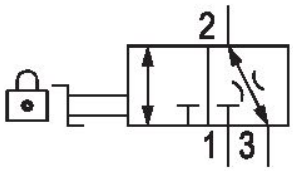

Technical data

Activation
Mechanical

Nominal flow Qn
30000 l/min

Compressed air connection
G 1

Working pressure min.
0 bar

Working pressure max
16 bar

Actuating element
rotary switch

Sealing principle
metal/metal sealing

Type
Ball Valve

Parts
Shut-off valve

Lock type
lockable

Lock type
for padlocks

Can be assembled into blocks
Can be assembled into blocks

Min. ambient temperature
-10 °C

Max. ambient temperature
50 °C

Medium
Compressed air
Neutral gases

Max. particle size
25 µm

Compressed air connection, exhaust
G 3/4

Nominal flow Qn 1 to 2
30000 l/min

Nominal flow Qn 2 to 3
130 l/min

Weight
0.825 kg

Housing material
Polyamide

Seal material
Polytetrafluorethylene

Material locking base
Steel

Material, front cover
Acrylonitrile butadiene styrene

Material threaded bushing
Die cast zinc

Material locking base
Steel

Surface locking base
galvanized

Material actuating control
Polyoxymethylene

Part No.
R412009261

Technical information

The pressure dew point must be at least 15 °C under ambient and medium temperature and may not exceed 3 °C .

Nominal flow Qn with secondary pressure p2 = 6 bar at Δp = 1 bar

A change in the flow direction (from air supply on the left to air supply on the right) occurs by rotating installation by 180° about the vertical axis. Please see the operating instructions for further details.

Dimensions

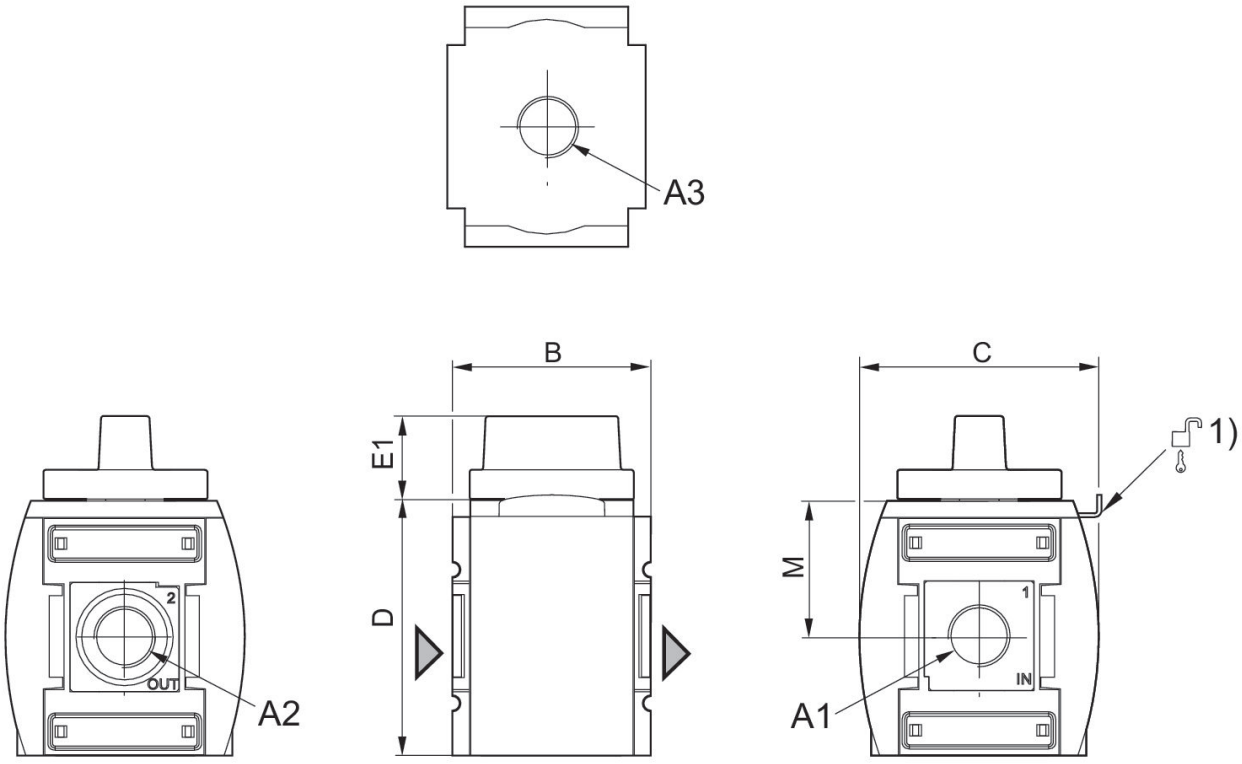

A1 = input
A2 = output
A3 = ventilation port
1) Mounting option for padlocks, max. shackle Ø 8

Dimensions in mm

Part No.	A1	A2	A3	B	C	D	E1	M
R412009260	G 3/4	G 3/4	G 3/4	85	103	109	36	58
R412009261	G 1	G 1	G 3/4	85	103	109	36	58

Flow rate characteristic, p2 = 0,05 - 7 bar

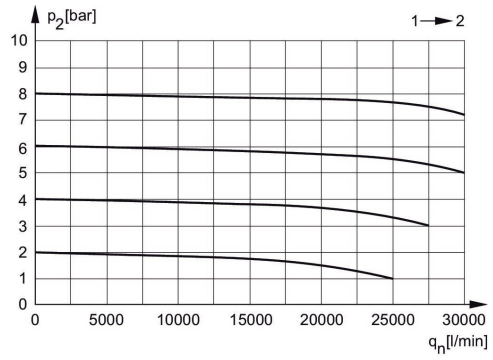

p2 = Secondary pressure
qn = Nominal flow

Rear exhaust

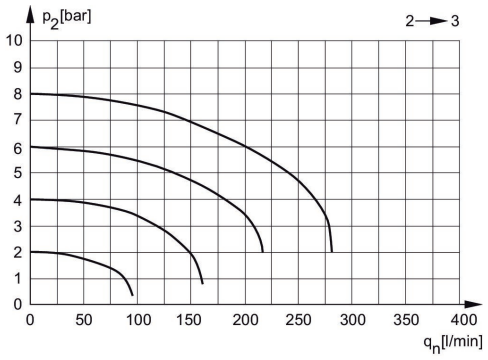

p2 = Secondary pressure
qn = Nominal flow

Accessories overview

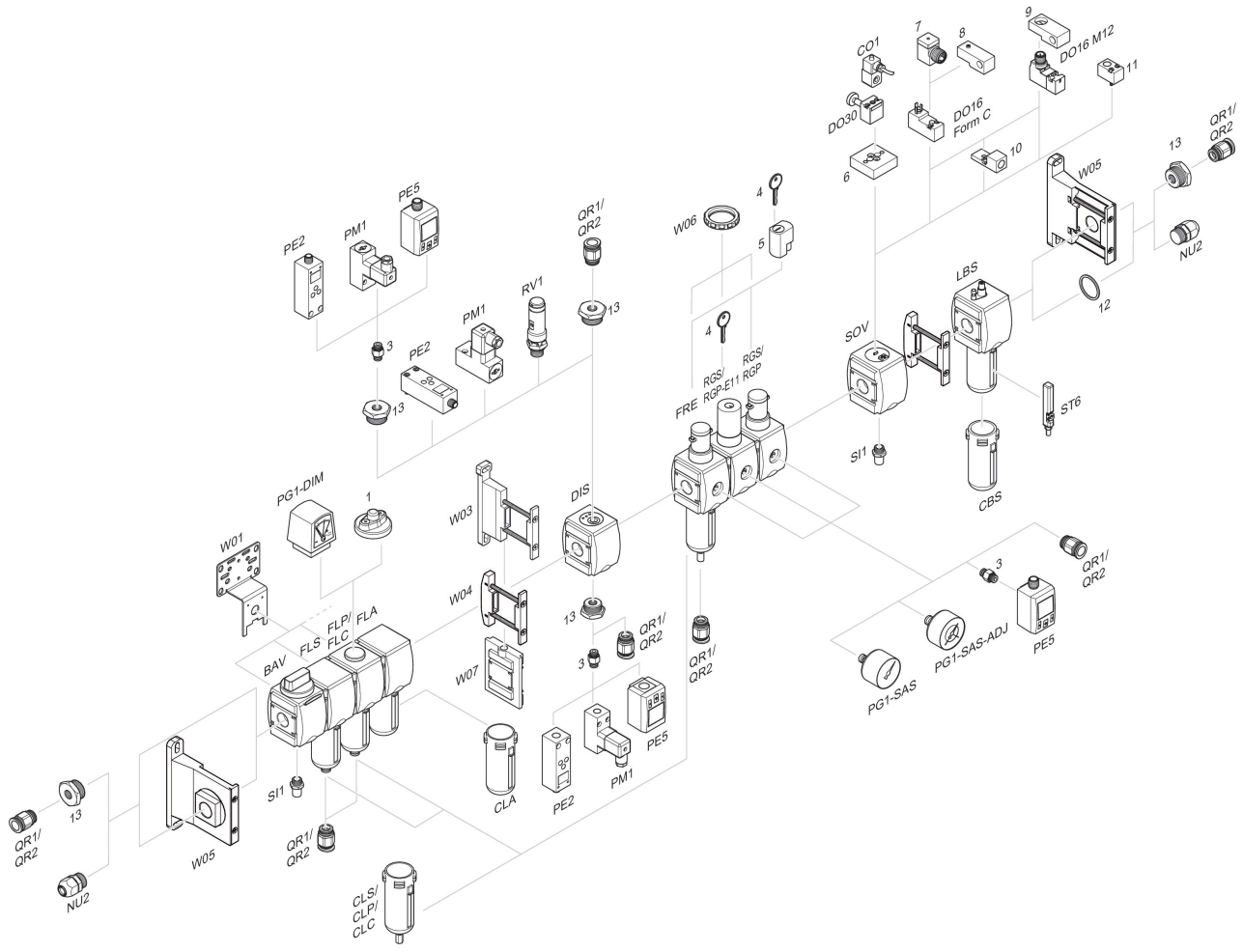

1 = contamination display 3 = Double nipple 4 = Key for E11 locking 5 = mortise lock 6 = Transition plate DO30 7 = Adapter, Series CON-VP 8 = Mounting aid DO16, form C 9 = Mounting aid DO16, M12 10 = Adapter for external pilot air 11 = Adapter pneumatic operation 12 = Sealing ring 13 = Reducing nipple