Series 1590TFL (Flanged Lid)

Top View of Assembly

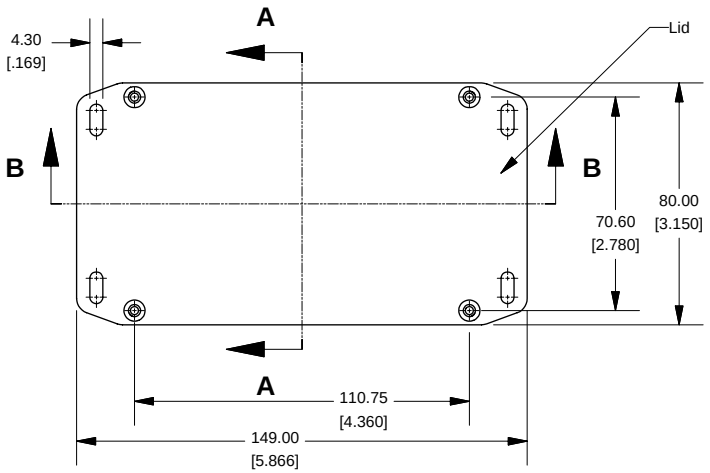

SECTION A-A
End View of Assembly

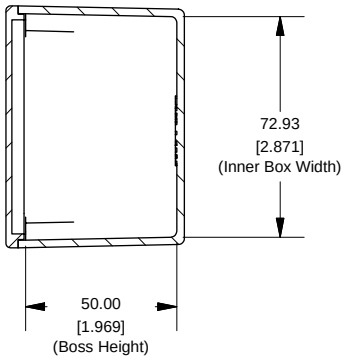

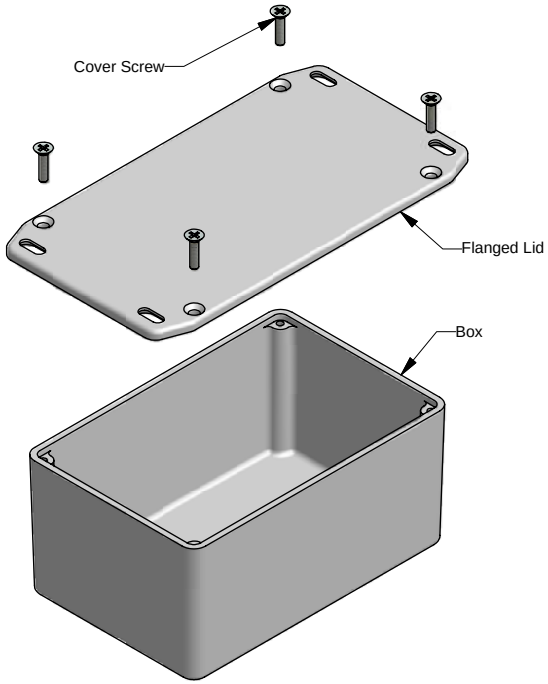

SECTION B-B
Side View of Assembly

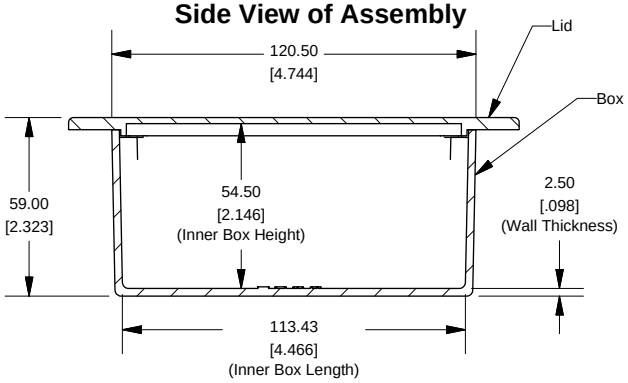

Top View Looking Inside Box

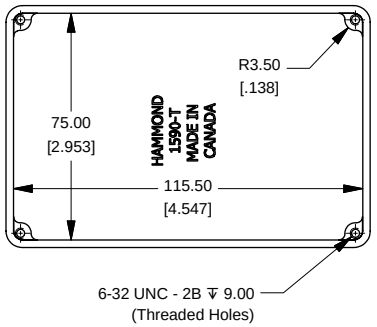

Lid

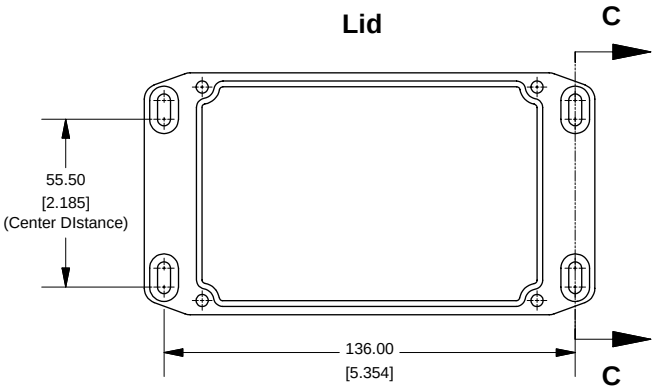

SECTION C-C
Side View of Slot

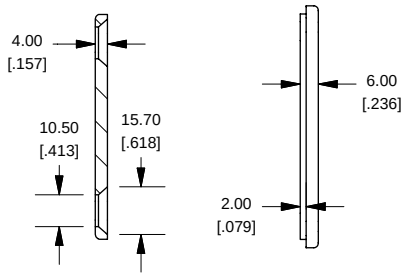

NOTE
Purchased assembly includes box, lid and 4 cover screws. Box and lid are made from Diecast Aluminum Alloy (alloy type 360.1).

PART NUMBERS	
1590TFL Enclosure	
Unfinished	1590TFL
Black Textured Powder Paint	1590TFLBK
1590TFL Liquid Resistant Enclosure (Silicon Factory Installed Gasket)	
Unfinished	1590WTFL
Black Textured Powder Paint	1590WTFLBK
ACCESSORIES	
Unfinished	
Cover Screws (Pkg 100) **[6-32 x 1/2" Nickel Plated Screws]**	1590MS100
Black Textured Powder Paint	
Cover Screws (Pkg 50) **[6-32 x 1/2" Stainless Steel Black Screws]**	1590MS50BK

HAMMOND MANUFACTURING™

www.hammondmfg.com