A3

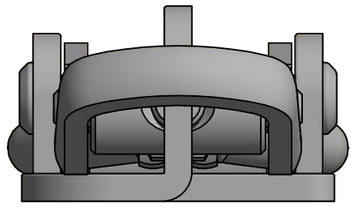

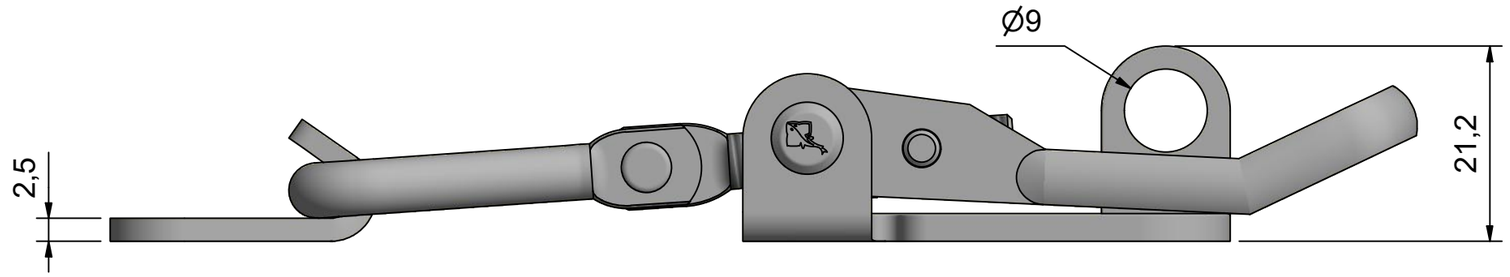

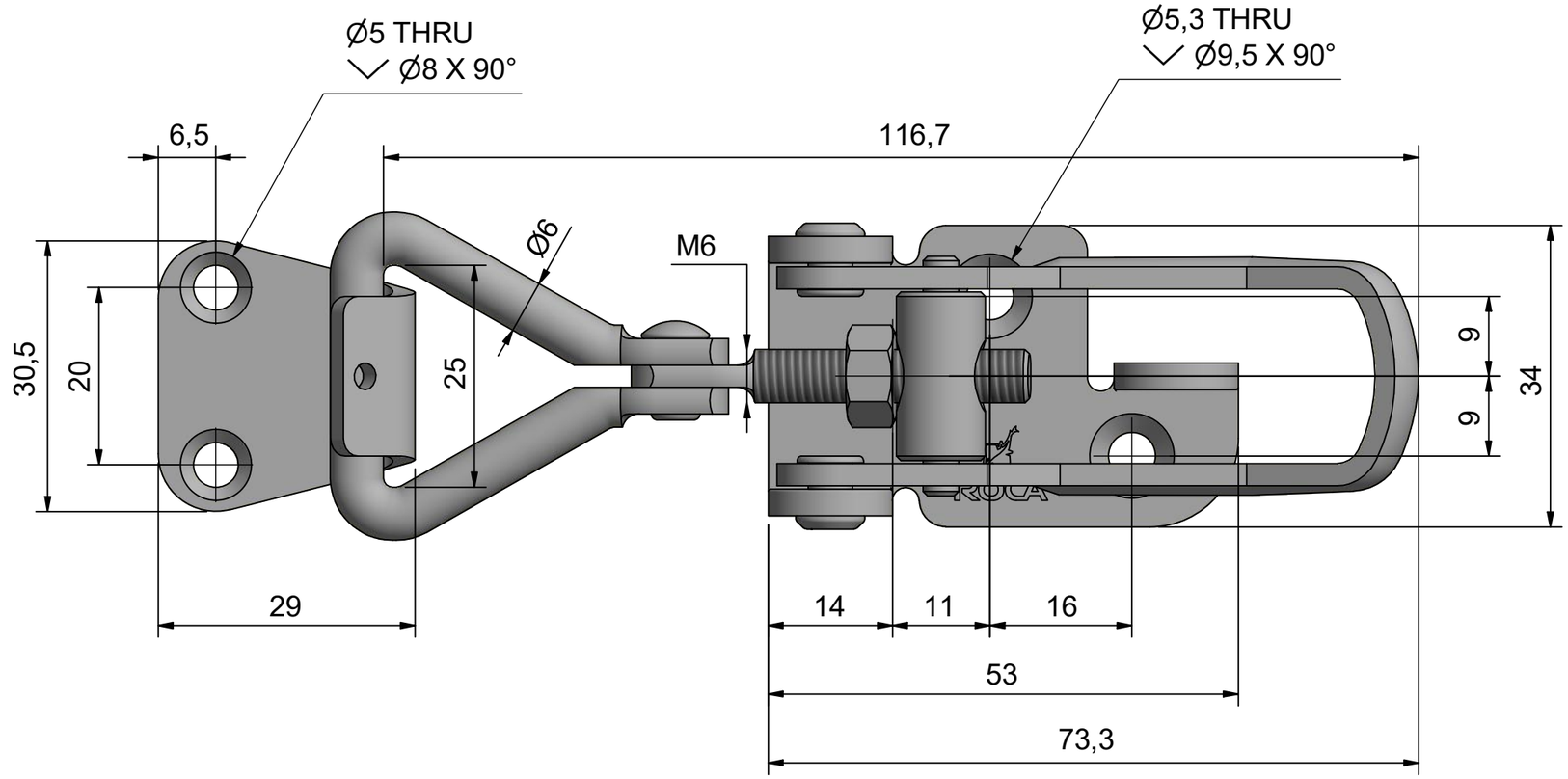

	Date
AISI316/EP	170602/LW
Name	Item no.
Eccenter latch with catch plate	**904110**