John Guest

Data Sheet DS-PM01

BSP Parallel Straight Adaptor (P Range)

The John Guest Straight Adaptor has been developed in various sizes for a wide range of applications including potable liquids, foodstuffs and air.

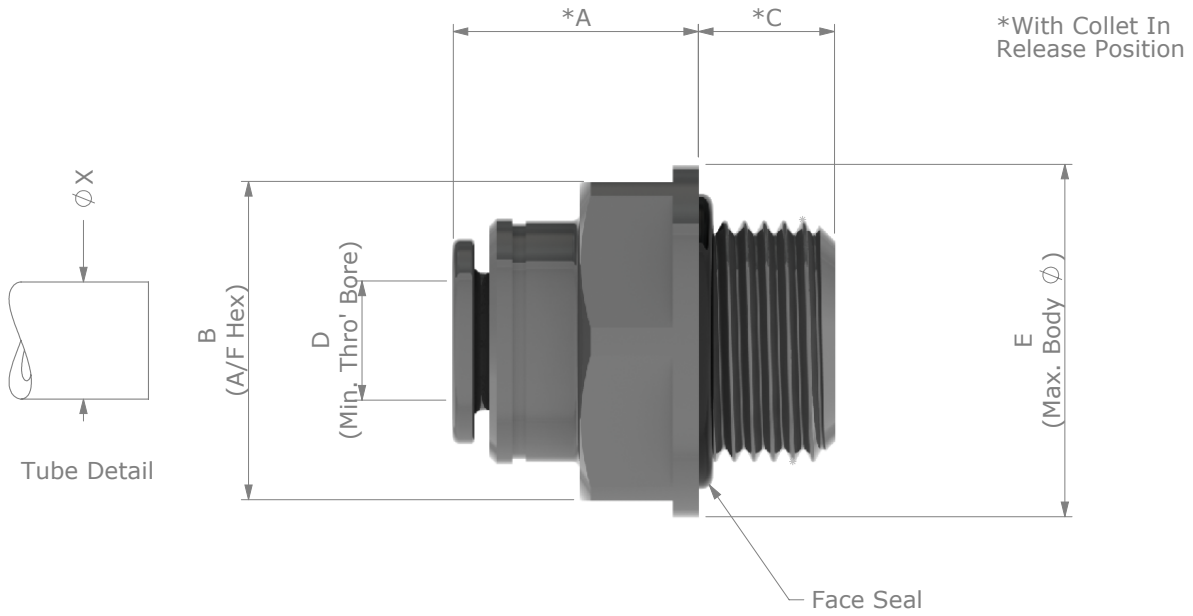

See page 2 for dimensions

Parts List

Part Description	Material	Part Description	Material
Body	Acetal Co-Polymer (Unfilled), Black	'O' Ring	Nitrile, Black
Collet	Acetal Co-Polymer (Unfilled), Black & Stainless Steel	Thread Seal	Nitrile, Black

Technical Information

Working Pressures & Temperatures

4-8mm	Air	-20 °C @ 16 Bar
	Liquid & Air	+1 °C @ 16 Bar, +23 °C @ 16 Bar, +70 °C @ 10 Bar
10-22mm	Air	-20 °C @ 10 Bar
	Liquid & Air	+1 °C @ 10 Bar, +23 °C @ 10 Bar, +70 °C @ 7 Bar

Applications

Drinks Dispense	✓
Potable Water	✓
Pneumatics	✓

The Copyright in this drawing and the products referred thereon belong to John Guest International Limited and this drawing nor the information contained herein shall be produced in any form or used for any purpose without written consent © 2012

The company has a policy of continuous research and development and reserves the right to amend without notice the specification and design of all products illustrated. For details of Terms and Conditions and any other technical enquiries, please contact our Customer Services Department on 01895 449233. Alternatively, call our Technical Helpdesk on 01895 423333

John Guest®

Data Sheet DS-PM01

BSP Parallel Straight Adaptor (P Range)

Product No.	Description	Pipe ∅		A	B	C	∅D	∅E
		∅X	Tolerance					
PM010411E	4mm x 1/8 BSP	4	+0.05 -0.07	17	14	5.5	2.5	15
PM010412E	4mm x 1/4 BSP			16	17	8.0	2.5	18
PM010511E	5mm x 1/8 BSP	5		17	14	5.5	3.5	15
PM010512E	5mm x 1/4 BSP			16	17	8.0	3.5	18
PM010611E	6mm x 1/8 BSP	6	+0.05 -0.10	20	15	5.5	4.0	16
PM010612E	6mm x 1/4 BSP			16	17	8.0	5.0	18
PM010811E	8mm x 1/8 BSP	8		16	17	5.5	4.0	18
PM010812E	8mm x 1/4 BSP			16	17	8.0	6.0	18
PM010813E	8mm x 3/8 BSP			16	22	9.5	6.5	24
PM011012E	10mm x 1/4 BSP	10		23	20	8.0	7.0	22
PM011013E	10mm x 3/8 BSP			19	22	9.5	7.5	24
PM011014E	10mm x 1/2 BSP			18	27	12.5	7.5	30
PM011213E	12mm x 3/8 BSP	12		21	24	9.5	8.5	26
PM011214E	12mm x 1/2 BSP			22	27	12.5	8.5	30
PM011514E	15mm x 1/2 BSP	15		26	27	12.5	12.0	30

Dimensions in mm

The Copyright in this drawing and the products referred thereon belong to John Guest International Limited and this drawing nor the information contained herein shall be produced in any form or used for any purpose without written consent © 2012

The company has a policy of continuous research and development and reserves the right to amend without notice the specification and design of all products illustrated. For details of Terms and Conditions and any other technical enquiries, please contact our Customer Services Department on 01895 449233. Alternatively, call our Technical Helpdesk on 01895 423333

Location: CCL-SA-SPE01
File: DS-PM01[120309][C].pdf
Release Number: 121009-C-SALE
CURRENT PRODUCTION
User: roses
Printed/Downloaded: 24 Aug 12,11:53
UNCONTROLLED IF PRINTED OR DOWNLOADED