RM3007

Absolute multiturn encoder with solid shaft

RMK0025-E24/E

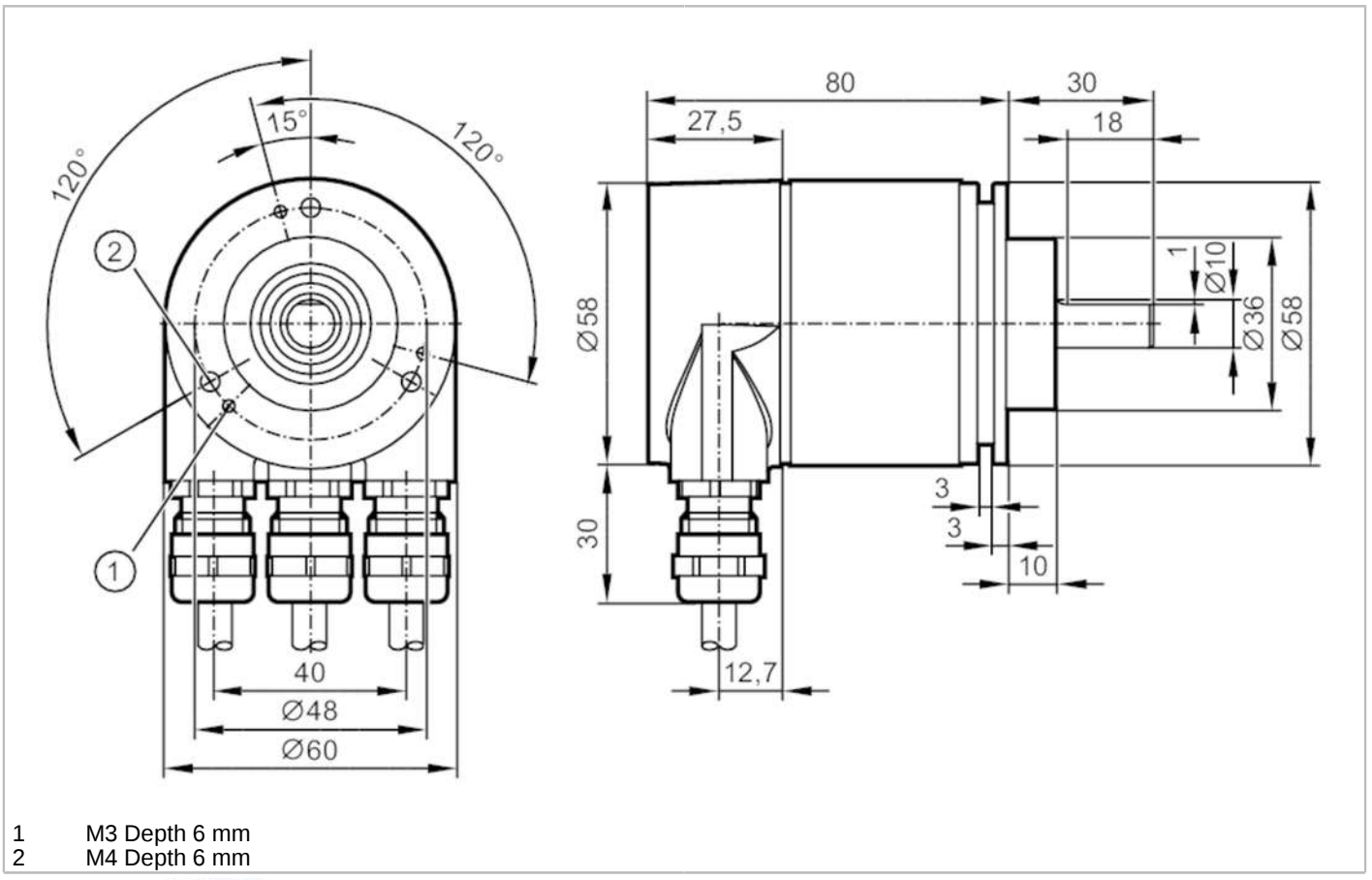

1 M3 Depth 6 mm
2 M4 Depth 6 mm

Product characteristics		
Resolution		8192 steps; 4096 revolutions; 25 bit
Communication interface		PROFIBUS DP
Shaft design		solid shaft
Shaft diameter	[mm]	10
Application		
Function principle		absolute
Revolution type		multiturn
Electrical data		
Operating voltage	[V]	10...30 DC
Current consumption	[mA]	100; ((24 V))
Reverse polarity protection		yes
Outputs		
Code		binary
Measuring/setting range		
Resolution		8192 steps; 4096 revolutions; 25 bit
Software / programming		
Parameter setting options		counting direction of the code values; Resolution; zero point; limit switches HI and LO; motion indicator; separation multiturn/singleturn

RM3007

Absolute multiturn encoder with solid shaft

RMK0025-E24/E

Diagnostic functions		alarms; warnings; status; serial number of the encoder
Addressing		address selector switch; 0...126
Interfaces		
Communication interface		PROFIBUS DP
PROFIBUS DP		
Transmission standard		DPV2
Operating conditions		
Ambient temperature	[°C]	-40...85
Max. relative air humidity	[%]	98
Protection		IP 67; (on the housing: IP 67; on the shaft: IP 67)
Tests / approvals		
Shock resistance		100 g (6 ms)
Vibration resistance		10 g (10...2000 Hz)
MTTF	[years]	13.5
Mechanical data		
Weight	[g]	596
Dimensions	[mm]	Ø 58 / L = 110
Materials		aluminium
Max. revolution, mechanical	[U/min]	12000
Shaft design		solid shaft
Shaft diameter	[mm]	10
Shaft material		steel (1.4104)
Max. shaft load axial (at the shaft end)	[N]	40
Max. shaft load radial (at the shaft end)	[N]	110
Fixing flange		clamping flange
Electrical connection		
terminal strip in the terminal chamber:		