# Product data sheet
## Characteristics

# XS618B1MBL5
## inductive sensor XS6 M18 - L62mm - brass - Sn8mm - 24..240VAC/DC - cable 5m



## Main

| | |
|---|---|
| Range of product | OsiSense XS |
| Series name | General purpose |
| Sensor type | Inductive proximity sensor |
| Device application | - |
| Sensor name | XS6 |
| Sensor design | Cylindrical M18 |
| Size | 62 mm |
| Body type | Fixed |
| Detector flush mounting acceptance | Flush mountable |
| Material | Metal |
| Type of output signal | Discrete |
| Wiring technique | 2-wire |
| [Sn] nominal sensing distance | 8 mm |
| Discrete output function | 1 NC |
| Output circuit type | AC/DC |
| Electrical connection | Cable |
| Cable length | 5 m |
| [Us] rated supply voltage | 24...240 V AC/DC 50/60 Hz |
| Switching capacity in mA | 5...200 mA DC<br>5...300 mA AC |
| IP degree of protection | IP68 double insulation conforming to IEC 60529<br>IP69K conforming to DIN 40050 |

## Complementary

| | |
|---|---|
| Thread type | M18 x 1 |
| Detection face | Frontal |
| Front material | PPS |
| Enclosure material | Nickel plated brass |
| Operating zone | 0…6.4 mm |
| Differential travel | 1...15% of Sr |
| Cable composition | 2 x 0.34 mm² |
| Wire insulation material | PvR |
| Status LED | Output state: 1 LED (yellow) |
| Supply voltage limits | 20…264 V AC/DC |
| Maximum residual current | 0.8 mA open state |
| Switching frequency | <= 1000 Hz DC<br><= 25 Hz AC |
| Maximum voltage drop | <5.5 V (closed) |
| Maximum delay first up | 25 ms |
| Maximum delay response | 0.5 ms |
| Maximum delay recovery | 0.5 ms |
| Marking | CE |
| Threaded length | 52 mm |
| Length | 62 mm |
| Net weight | 0.24 kg |

The information provided in this documentation contains general descriptions and/or technical characteristics of the performance of the products contained herein.
This documentation is not intended as a substitute for and is not to be used for determining suitability or reliability of these products for specific user applications.
It is the duty of any such user or integrator to perform the appropriate and complete risk analysis, evaluation and testing of the products with respect to the relevant specific application or use thereof.
Neither Schneider Electric Industries SAS nor any of its affiliates or subsidiaries shall be responsible or liable for misuse of the information contained herein.

## Environment

| | |
|---|---|
| Product certifications | CSA<br>UL |
| Ambient air temperature for operation | -25…70 °C |
| Ambient air temperature for storage | -40…85 °C |
| Vibration resistance | 25 gn amplitude = +/- 2 mm (f = 10…55 Hz) conforming to IEC 60068-2-6 |
| Shock resistance | 50 gn for 11 ms conforming to IEC 60068-2-27 |

## Offer Sustainability

| | |
|---|---|
| Sustainable offer status | Green Premium product |
| REACh Regulation | REACh Declaration |
| EU RoHS Directive | Pro-active compliance (Product out of EU RoHS legal scope) EU RoHS Declaration |
| Mercury free | Yes |
| RoHS exemption information | Yes |
| Environmental Disclosure | Product Environmental Profile |
| Circularity Profile | End Of Life Information |

## Contractual warranty

| | |
|---|---|
| Warranty | 18 months |

# XS618B1MBL5

## Dimensions

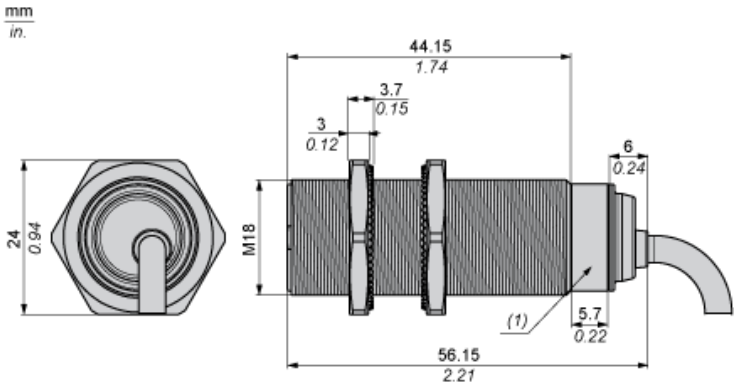


(1) LED

## Minimum Mounting Distances

Side by side

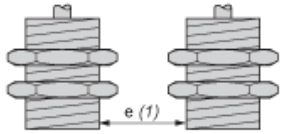


e (1) 16 mm/0.63 in.
≥

Face to face

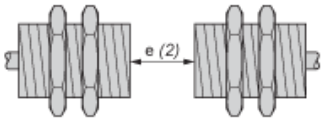


e (2) 100 mm/3.94 in.
≥

Facing a metal object

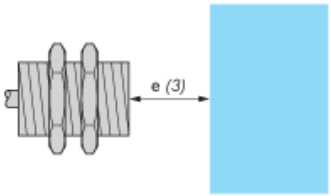


e (3) 25 mm/0.98 in
≥

## Mounting

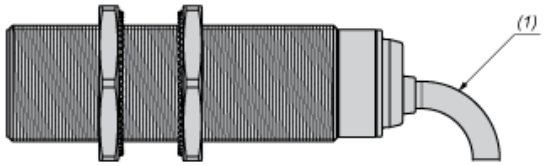


(1) Bending cable: 4 x external cable diameter

## Wiring Schemes

### 2-Wire AC or DC

NC output

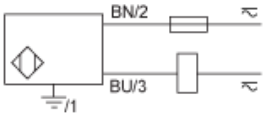


BU : Blue
BN : Brown