Features/Benefits

- *Vertical and right angle SMT models*
- *Vertical and right angle thru-hole models*
- *Multiple caps and legends*
- *Several LED colors and bi-color options*
- *RoHS compliant /compatible*

Typical Applications

- *Consumer electronics*
- *Server/storage*
- *Medical devices*
- *Test/Measurement/Instrumentation*
- *Audio/Video*
- *Computers/Peripherals*
- *Security*



Specification

FUNCTION: N.O. momentary action
TERMINALS: SMT & Thru-hole

Mechanical

OPERATING FORCE: 160 ± 50gf for V1; V2; V3; R1; R2 models
220 ± 50 gf for R3N model
OPERATING LIFE: 50,000 cycles (250m Ω max)
RECOMMENDED OPERATING STROKE: 0.25mm ± 0.1mm

Electrical

RATING: 50mA @ 12VDC
CONTACT RESISTANCE: <100m Ω (initial)
DIELECTRIC WITHSTANDING VOLTAGE:
>250VAC (50-60 Hz) between terminals - 1 min.Ω
INSULATION RESISTANCE: >100M Ω
BOUNCE TIME: <10ms

Packaging

Thru-hole: 200 pieces per tray
SMT: tape & reel (see V2, V3 or R3N mounting style drawings)

Environmental

OPERATING TEMPERATURE: -25°C to +70°C
STORAGE TEMPERATURE: -25°C to +80°C

Process

SOLDERABILITY: Thru-hole - wave compatible
SMT - convection or IR reflow compatible

Materials

CONTACTS/TERMINALS:	Base metal; brass Plating; Ag
DOME:	Base metal: Phosphor bronze Plating; Ag
BASE:	PA
ACTUATOR:	PA
COVER:	R3N option: Stainless steel V2 & V3 options - PPA Other options - PA

Caps

Caps are ordered separately and shipped bulk. Thru-hole versions available with caps assembled under custom part number. Contact customer service for details.

How To Order

Our easy build-a-switch concept allows you to mix and match options to create the switch you need. To order, select desired option from each category and place it in the appropriate box.

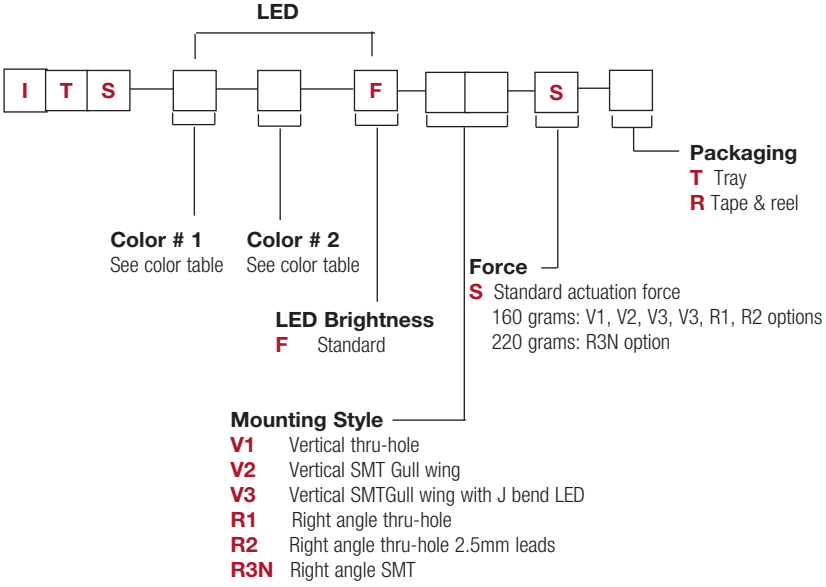

LED Color	
00	No light
10	Red
12	Red/Yellow
13	Red/Green
14	Red/Blue
20	Yellow
21	Yellow/Red
23	Yellow/Green
30	Green
31	Green/Red
32	Green/Yellow
40	Blue
41	Blue/Red
50	White
60	True green

* Other colors available by request

ITS Series
Illuminated Tact Switch

LED COLOR / BRIGHTNESS

LED Characteristic	units	Standard LED Color Options					
		Red (1)	Yellow (2)	Green (3)	Blue (4)	White (5)	True Green (6)
Recommended Operating	mA @ 5VDC	20mA	20mA	20mA	20mA	20mA	20mA
Forward Current	mA	30 mA	30 mA	30 mA	30 mA	30 mA	30 mA
Peak Pulsing Current (1/8 duty @ 1kHz)	mA	125 mA	125 mA	125 mA	125 mA	125 mA	125 mA
Power Dissipation	mW	75 mW	75 mW	75 mW	108 mW	108 mW	108 mW
Forward Voltage @ 20mA	Volts	2.5 Volts Max.	2.5 Volts Max.	2.5 Volts Max.	3.6 Volts Max.	3.6 Volts Max.	3.6 Volts Max.
Dominant Wavelength @ 20mA	nm	637nm (Typical)	590nm (Typical)	570nm (Typical)	465nm (Typical)	CIE Coordinates X= 0.25 ~ 0.33 Y= 0.24 ~ 0.34	522nm (Typical)
Wavelength at Peak Emission @ 20mA	nm	645nm (Typical)	590nm (Typical)	573nm (Typical)	460nm (Typical)		515nm (Typical)
Spectral Half Bandwidth @ 20mA	nm	20nm (Typical)	20nm (Typical)	17nm (Typical)	25nm (Typical)		33nm (Typical)
Luminous Intensity @ 20mA	mcd	50mcd Minimum	125mcd Minimum	40mcd Minimum	100mcd Minimum	250mcd Minimum	500mcd Minimum
Viewing Angle at 50% LV (@10mA)	degrees	150° Typical	120° Typical	120° Typical	120° Typical	150° Typical	120° Typical

MOUNTING STYLES

V1 - Vertical Thru-hole



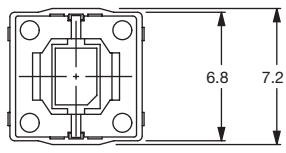

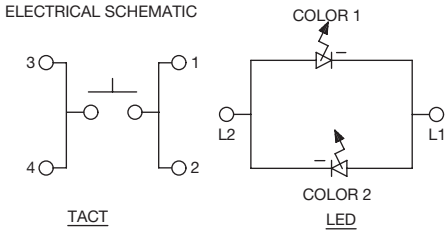

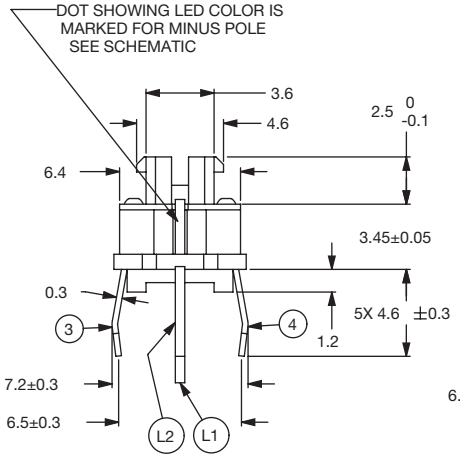

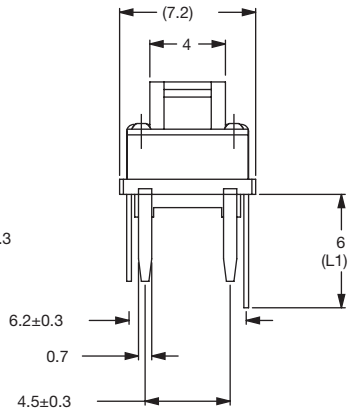

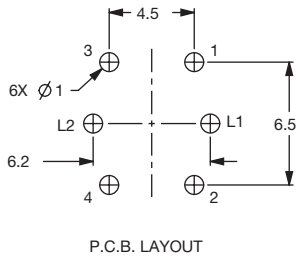

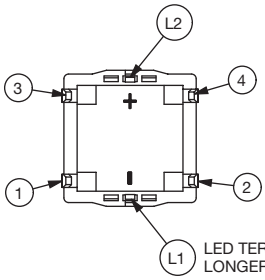

TRAY PACKAGING: 200 PIECES

MOUNTING STYLES

V2 - Vertical SMT; Gullwing



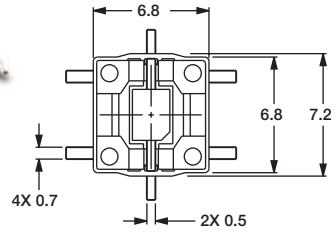

ELECTRICAL SCHEMATIC

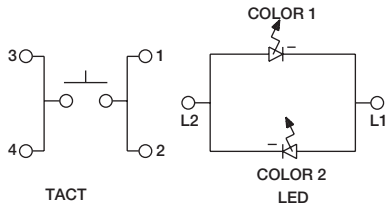

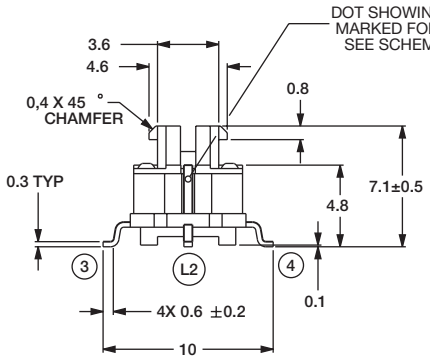

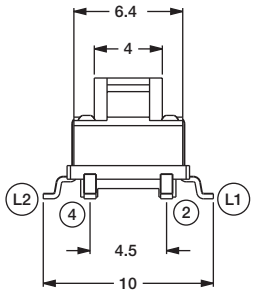

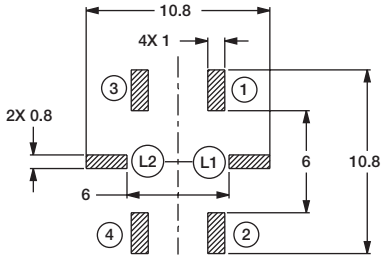

P.C.B .LAYOUT

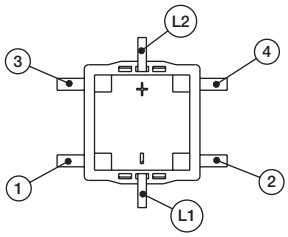



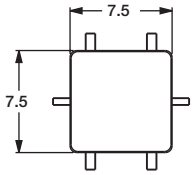

TAPE & REEL: 500 PIECES

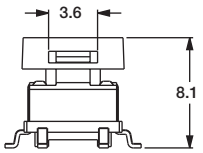

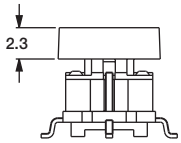

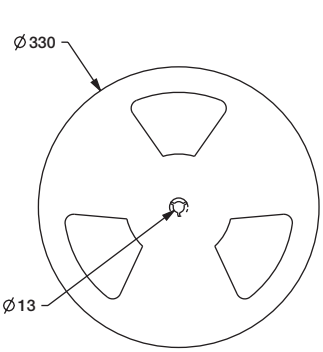

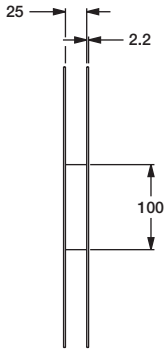

NOTES:
1. SWITCH WITH TEMPORARY PICK AND PLACE CAP.

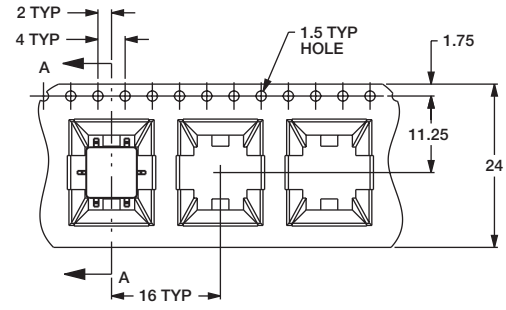

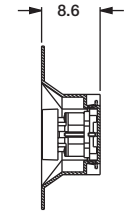

SECTION A-A

MOUNTING STYLES

V3 - Vertical SMT; Gull wing with J bend LED



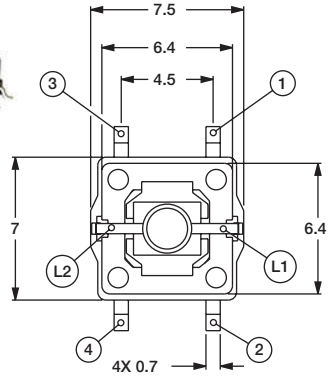

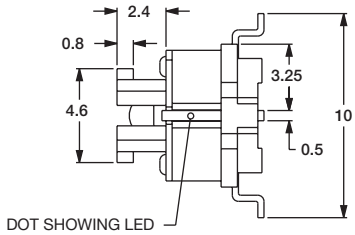

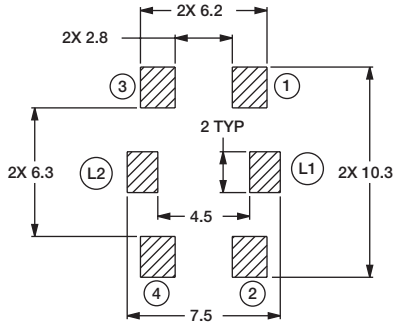

P.C.B. LAYOUT

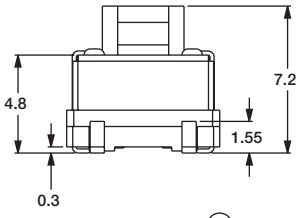

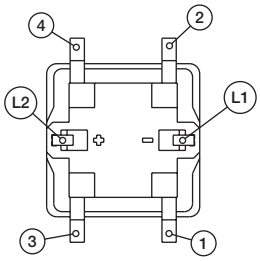

ELECTRICAL SCHEMATIC

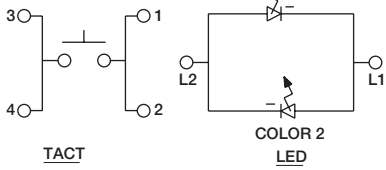



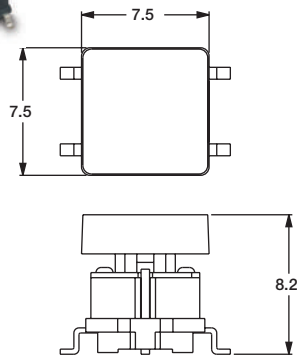

SCALE 3:1

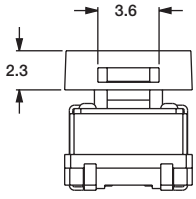

TAPE & REEL: 500 PIECES

NOTES:
1. SWITCH WITH TEMPORARY PICK AND PLACE CAP.

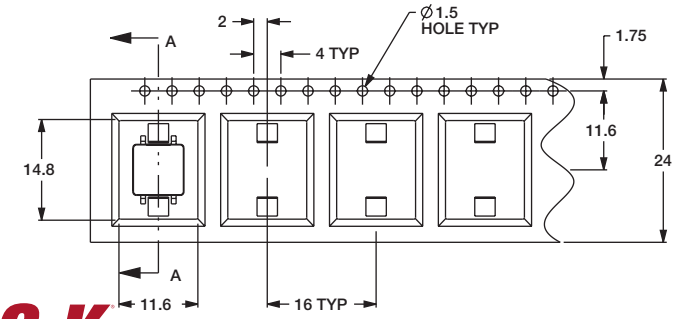

SECTION A-A

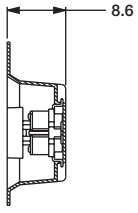

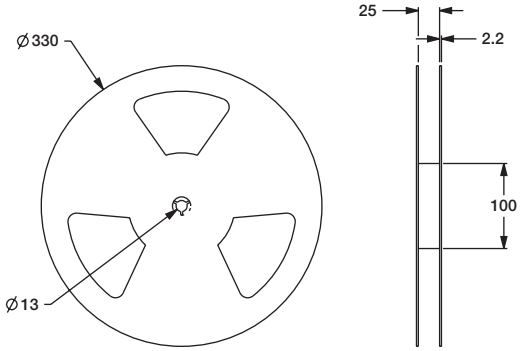

Dimensions are shown: mm
Specifications and dimensions subject to change

MOUNTING STYLES

R1 - Right Angle; Thru-hole



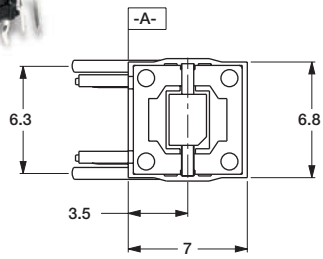

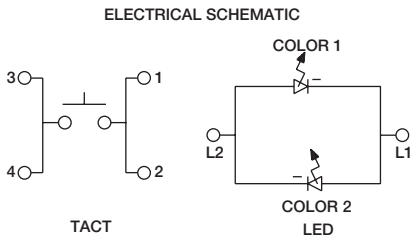

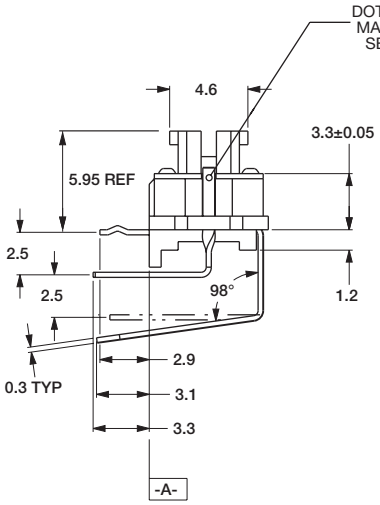

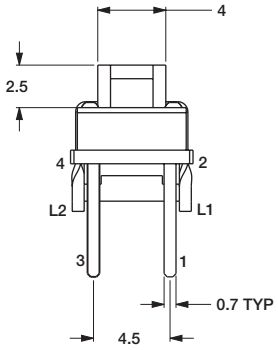

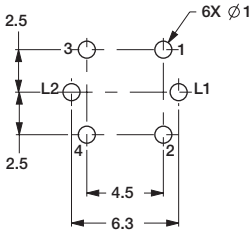

TRAY PACKAGING: 200 PIECES

R2 - Right Angle; Thru-hole 2.5mm leads



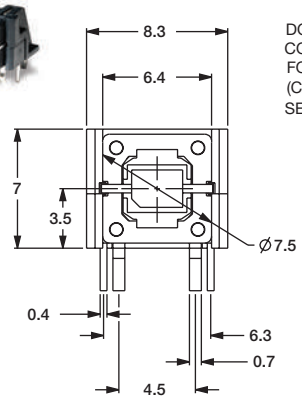

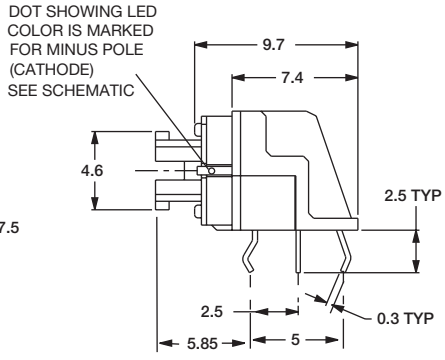

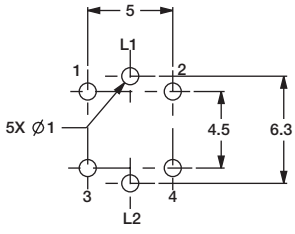

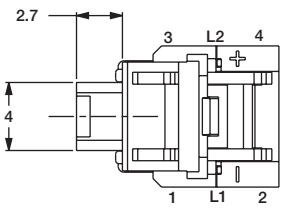

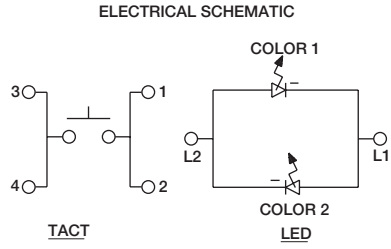

TRAY PACKAGING: 200 PIECES

MOUNTING STYLES

R3N - Right Angle, SMT



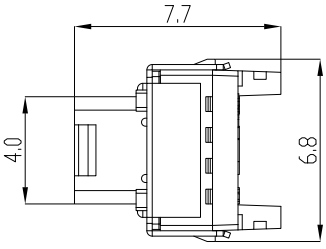

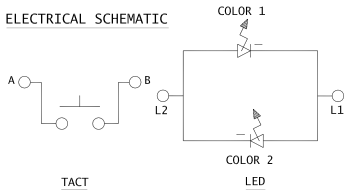

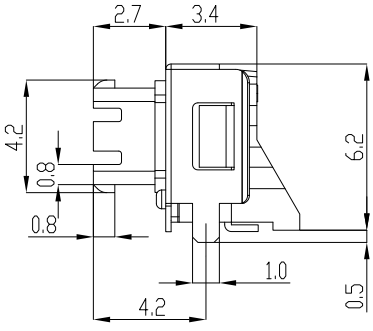

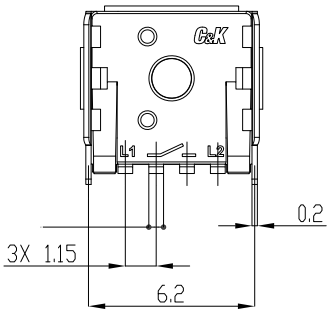

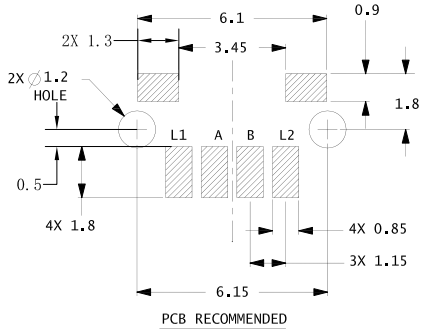

TAPE & REEL: 500 PIECES

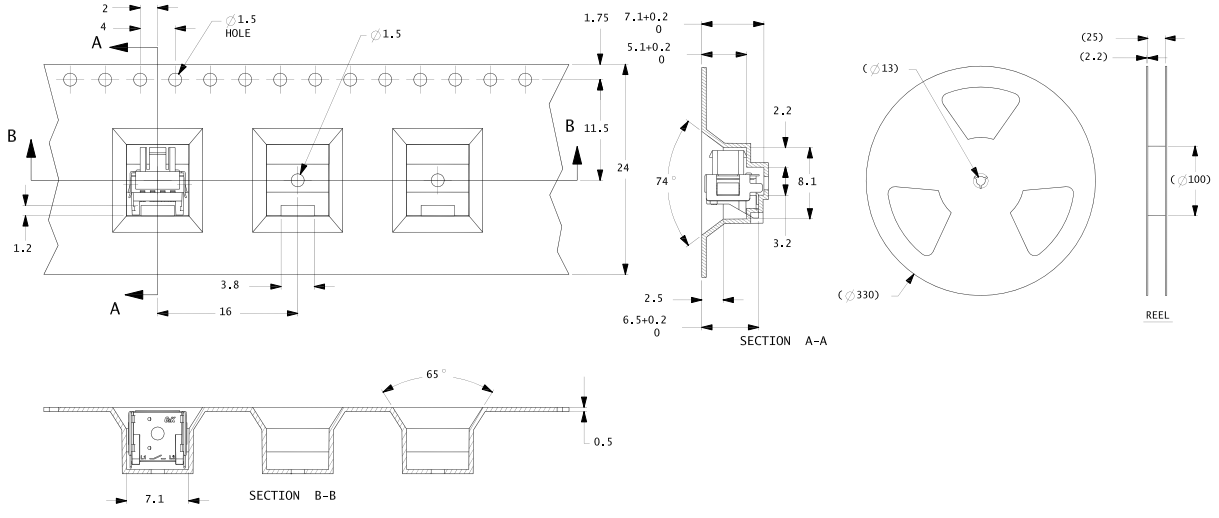

FORCE

OPTION CODE	FORCE
S	Standard 160 gf - V1, V2, V3, R1, R2 options 220 gf - R3N option

CAPS

Use the individual ordering code for each cap



399EA0000*

Round cap, clear

3 9 9 E | A | 0 | 0 0 | 0

Material
A Polycarbonate - Natural/Clear

Paint Color
0 No paint

Marking
00 No marking

Marking Color
0 No marking

* Not to be used with right angle versions

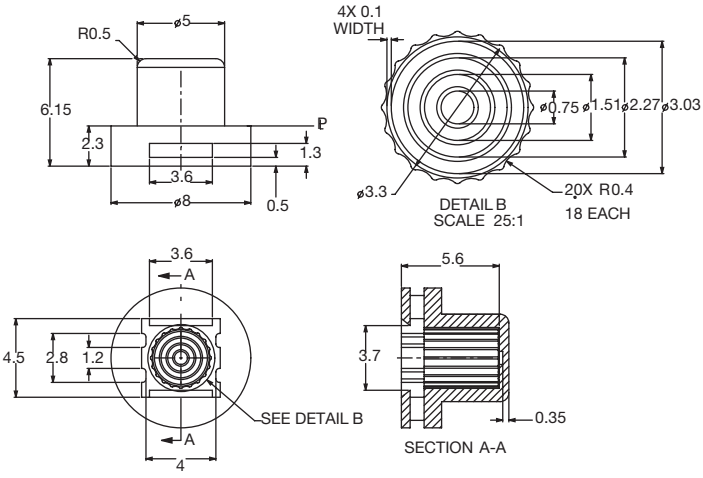

CAPS



400EA0000

Natural/clear



400EB0000

Translucent white, flat edge



400ECA01E

Matte silver paint laser etch, flat edge

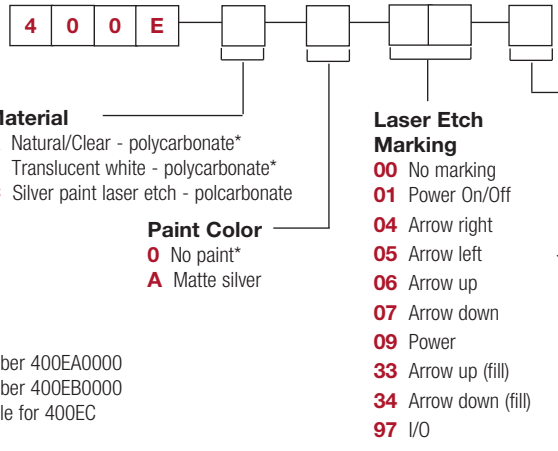

* Material A has only one part number 400EA0000
* Material B has only one part number 400EB0000
* Paint color option 0 is not available for 400EC



ITSXXFR1ST &
400ECA01E cap

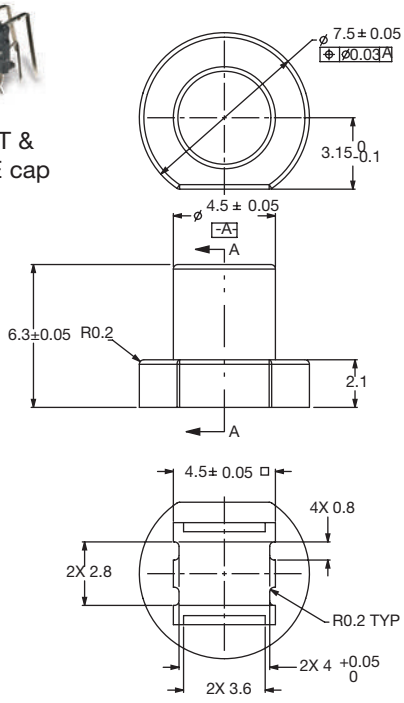



400ECA01E SHOWN

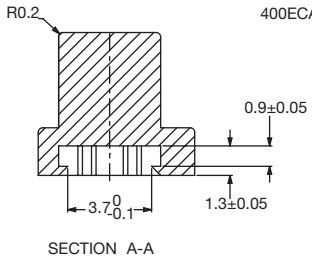

SECTION A-A

400E cap dimensions shown are "as molded" (no paint).

CAPS



401ECA06E

Matte silver paint, laser etch, tall oval

4	0	1	E					

Material
- **A** Natural/clear - polycarbonate*
- **B** Translucent white - polycarbonate*
- **C** Paint laser etch - polycarbonate

Paint Color
- **0** No paint*
- **A** Matte silver

Laser Etch Marking
- **00** No marking
- **06** Arrow up
- **07** Arrow down
- **33** Arrow up (fill)
- **34** Arrow down (fill)

Marking Color
- **0** No marking
- **E** Laser etch (painted caps only)

* Material A has only one part number 400EA0000
* Material B has only one part number 400EB0000
* Paint color option 0 is not available for 400EC

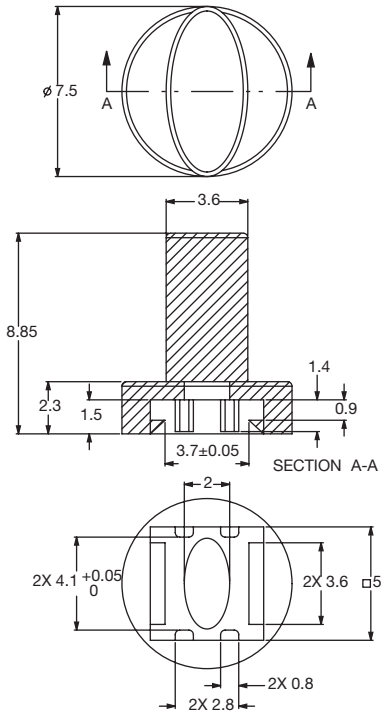

401E cap dimensions shown are "as molded" (no paint).