DXMR90-4K Overview

Banner's DXMR90-4K IO-Link Controller consolidates data from multiple sources to provide local data processing as well as accessibility for host systems as a platform for the Industrial Internet of Things (IIoT).

The DXMR90-4K IO-Link Controller 4-port IO-link device serves as the gateway for the connection of up to 4 IO-link devices including sensors, lighting products, IO-link hubs, and more. The DXMR90-4K IO-Link Controller can have multiple configurations and includes a model number label on the housing. Use this model number to identify which boards are included in your controller.



The DXMR90-4K contains four IO-link ports, allowing for concurrent communication to up to four IO-Link devices. Data is collected into the internal logic controller to facilitate edge processing, protocol conversion to Industrial Ethernet, Modbus/TCP, and pushing information to web servers. In addition to IO-Link devices, the IO-Link master can be used to transmit up to eight discrete signals using pin 2 or pin 4 of the IO-link master ports.

The configurable IO-link master device works with IO-link devices and allows for quick deployment of IO-link data to Ethernet, PROFINET, Modbus TCP, and Modbus RTU networks.

- Local control or connectivity with automation protocols, including EtherNet/IP, PROFINET, Modbus/TCP, and Modbus RTU[1]
- Logic processing and problem-solving capable of deploying solutions to process and control data from multiple devices
- Compact housing saves space and weight compared to traditional "block" style form factors
- IP67 housing simplifies installation in any location by eliminating the need for a control cabinet
- Consolidate cable runs to minimize cabling and associated weight, especially in weight-critical applications such as robotics
- Flexible and Customizable—Expanded internal logic controller with action rules and ScriptBasic programming

DXMR90-4K Models

Model	Ethernet Connection	IO-Link Master Connections	Other Connections
DXMR90-4K	One female M12 D-Code Ethernet Connector	Four female M12 connections for IO-Link master connections	One male M12 (Port 0) for incoming power and Modbus RS-485, one female M12 for daisy chaining Port 0 signals.

Controller Connections for the DXMR90-4K

To connect IO-Link devices on machines in industrial environments, an M12 quick-disconnect connection is typically used. The pin assignment according to IEC 60974-5 is the following:

- Pin 1: 24 V DC
- Pin 2: Switching Digital I/O (PNP only)
- Pin 3: 0 V
- Pin 4: Switching Digital I/O (NPN, PNP, or Push-Pull) and IO-link Communication Line

[1] EtherNet/IP™ is a trademark of ODVA, Inc. Modbus® is a registered trademark of Schneider Electric USA, Inc. PROFINET® is a registered trademark of PROFIBUS Nutzerorganisation e.V. By default, the DXMR90-4K IO-Link Controller is set to a static IP address of 192.168.0.1.

© Banner Engineering Corp.

IO-Link pin assignments

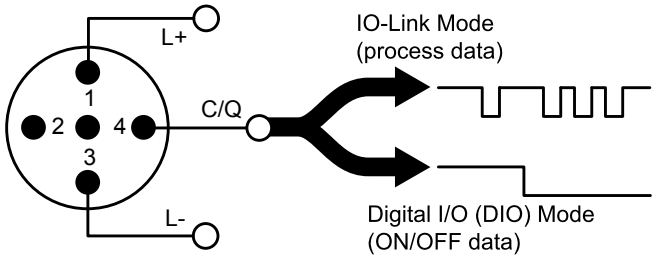

DXMR90-4K IO-Link Controller ports

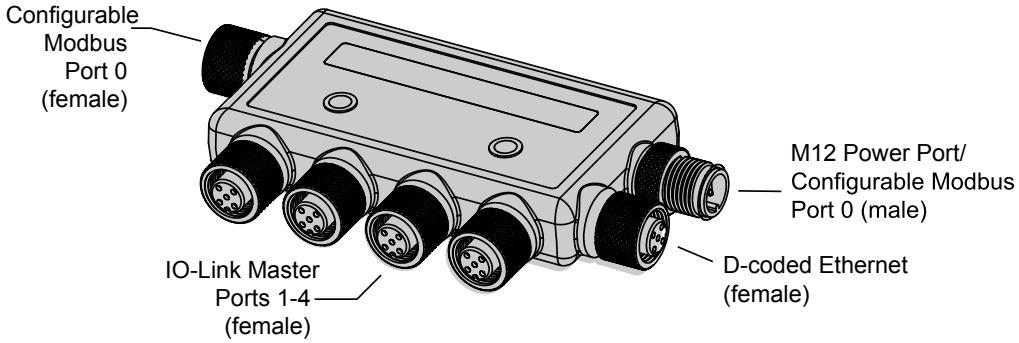

One male M12 connection provides common power and ground to all M12 IO-Link ports. One 100 Mbps Ethernet port (female) uses an M12 D-coded Ethernet connection.

- Modbus TCP
- EtherNet/IP
- PROFINET
- Configuration/discovery port

Four IO-Link controller connections using female M12 connectors.

- Separate IO-Link control and programmability for each connection point
- Configurable SIO mode on Input 1 and Input 2 of each IO-Link port

The DXMR90-4K IO-Link Controller has 4 Class A ports. Pin 2 on these is an additional discrete IO channel. For specific pinout connections, see "Wiring for the DXMR90-4K" on page 3.

For more information on the device registers and port settings of the DXMR90-4K IO-Link Controller, refer to the DXMR90-4K IO-Link Controller IO-Link Master Device Register Map (p/n 229732).

Installation Instructions

Installing the DXMR90-4K

Install the DXMR90-4K to allow access for functional checks, maintenance, and service or replacement.

Fasteners must be of sufficient strength to guard against breakage. The use of permanent fasteners or locking hardware is recommended to prevent the loosening or displacement of the device. The mounting hole (4.5 mm) in the DXMR90-4K accepts M4 (#8) hardware. See the figure below to help in determining the minimum screw length.

© Banner Engineering Corp.

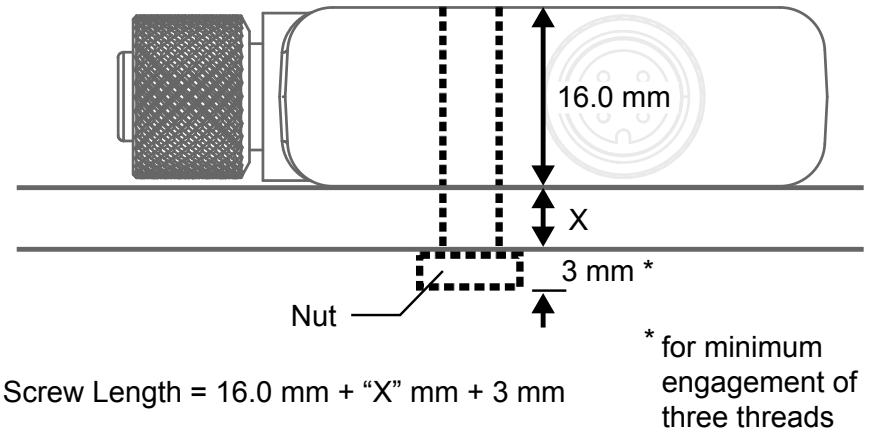

CAUTION: Do not overtighten the DXMR90-4K's mounting screw during installation. Overtightening can affect the performance of the DXMR90-4K.

Wiring for the DXMR90-4K

DXMR90-4K IO-Link Controller ports

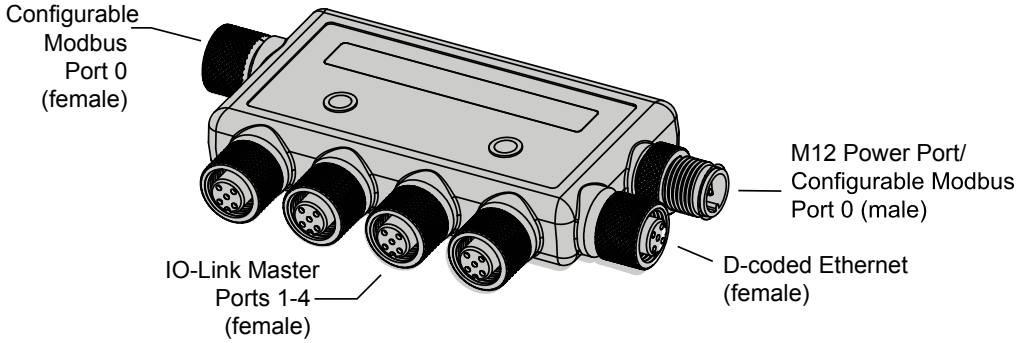

Ports 1-4 female connector

Port 1–4 5-pin M12 Connector (female)	Pin	Wire Color	Description
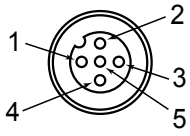	1	Brown (bn)	18 V DC to 30 V DC
	2	White (wh)	I/Q (digital in-out)
	3	Blue (bu)	DC common (GND)
	4	Black (bk)	C/Q (communications/digital in-out)
	5	Gray (gy)	Not used/reserved

Port 0 male connector

Port 0 4-pin M12 Connector (male)	Pin	Wire Color	Description
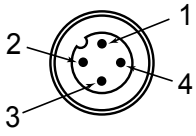	1	Brown (bn)	18 V DC to 30 V DC
	2	White (wh)	RS485 / D1 / B / +
	3	Blue (bu)	DC common (GND)
	4	Black (bk)	RS485 / D0 / A / -

© Banner Engineering Corp.

Port 0 female connector

Port 0 4-pin M12 Connector (female)	Pin	Wire Color	Description
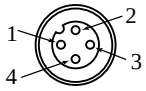	1	Brown (bn)	18 V DC to 30 V DC
	2	White (wh)	RS485 / D1 / B / +
	3	Blue (bu)	DC common (GND)
	4	Black (bk)	RS485 / D0 / A / -

D-coded industrial Ethernet connector

4-pin Industrial Ethernet Connector (female)	Pin	Wire Color	Description
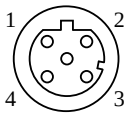	1	Black (bk)	+Tx
	2	Red (rd)	+Rx
	3	Green (gn)	–Tx
	4	White (wh)	–Rx

Specifications for the DXMR90-4K

Supply Voltage
18 V DC to 30 V DC

Supply Protection Circuitry
Protected against reverse polarity and transient voltages

Power Consumption
24 V DC at 100 mA + 200 mA/port = 900 mA maximum

Construction
Connector Body: PVC translucent black

Indicators
Green/amber: Program status indicators
Green/amber: Ethernet communications
Red/green/blue on port 1: IO-Link Port 1 Status
Red/green/blue on port 2: IO-Link Port 2 Status
Red/green/blue on port 3: IO-Link Port 3 Status
Red/green/blue on port 4: IO-Link Port 4 Status

Connections
Five integral 5-pin M12 female quick disconnect
One integral 4-pin M12 male quick disconnect
One integral 5-pin M12 female D-Code quick disconnect

Application Note
When connecting external devices through the DXMR90-4K, it is important not to exceed the maximum current limitations of 3.5 Amps

Communication Hardware (RS-485)
Interface: 2-wire half-duplex RS-485
Baud rates: 1.2K, 2.4K, 9.6k, 19.2k (default), 38.4k, 57.6K, or 115.2K
Data format: 8 data bits, no parity, 1 stop bit

Communication Protocols
Modbus® RTU, PROFINET®, Modbus/TCP, EtherNet/IP™
EtherNet/IP™ is a trademark of ODVA, Inc. Modbus® is a registered trademark of Schneider Electric USA, Inc. PROFINET® is a registered trademark of PROFIBUS Nutzerorganisation e.V.

Security Protocols
TLS, SSL, HTTPS

Digital Inputs (SIO [DI] Mode)
Input Current: 5 mA typical
ON Voltage/Current: 15 V DC minimum/5 mA minimum
OFF Voltage: 5 V DC maximum

Digital Outputs (SIO [DO] Mode)
On-Resistance: 120 mΩ typical, 250 mΩ maximum
Current Limit: 0.7 A minimum, 1.0 A typical, 1.3 A maximum
Off Leakage Current: -10 µA minimum, 10 µA maximum

IO-Link Baud Rates
COM1: 4.8 kbps
COM2: 38.4 kbps
COM3: 230.4 kbps

Operating Conditions
–40 °C to +70 °C (–40 °F to +158 °F)
90% at +70 °C maximum relative humidity (non-condensing)

Storage Temperature
–40 °C to +80 °C (–40 °F to +176 °F)

Environmental Ratings
For Indoor Use Only
IP65, IP67, NEMA 1, UL Type 1

Vibration and Mechanical Shock
Meets IEC 60068-2-6 requirements (Vibration: 10 Hz to 55 Hz, 1.0 mm amplitude, 5 minutes sweep, 30 minutes dwell)
Meets IEC 60068-2-27 requirements (Shock: 30G 11 ms duration, half sine wave)

Certifications

Banner Engineering BV
Park Lane, Culliganlaan 2F bus 3
1831 Diegem, BELGIUM

Turck Banner LTD Blenheim House
Blenheim Court
Wickford, Essex SS11 8YT
GREAT BRITAIN

© Banner Engineering Corp.

Required Overcurrent Protection

WARNING: Electrical connections must be made by qualified personnel in accordance with local and national electrical codes and regulations.

Overcurrent protection is required to be provided by end product application per the supplied table.

Overcurrent protection may be provided with external fusing or via Current Limiting, Class 2 Power Supply.

Supply wiring leads < 24 AWG shall not be spliced.

For additional product support, go to www.bannerengineering.com.

Supply Wiring (AWG)	Required Overcurrent Protection (A)	Supply Wiring (AWG)	Required Overcurrent Protection (A)
20	5.0	26	1.0
22	3.0	28	0.8
24	1.0	30	0.5

Dimensions

All measurements are listed in millimeters, unless noted otherwise.

DXMR90-4K dimensions

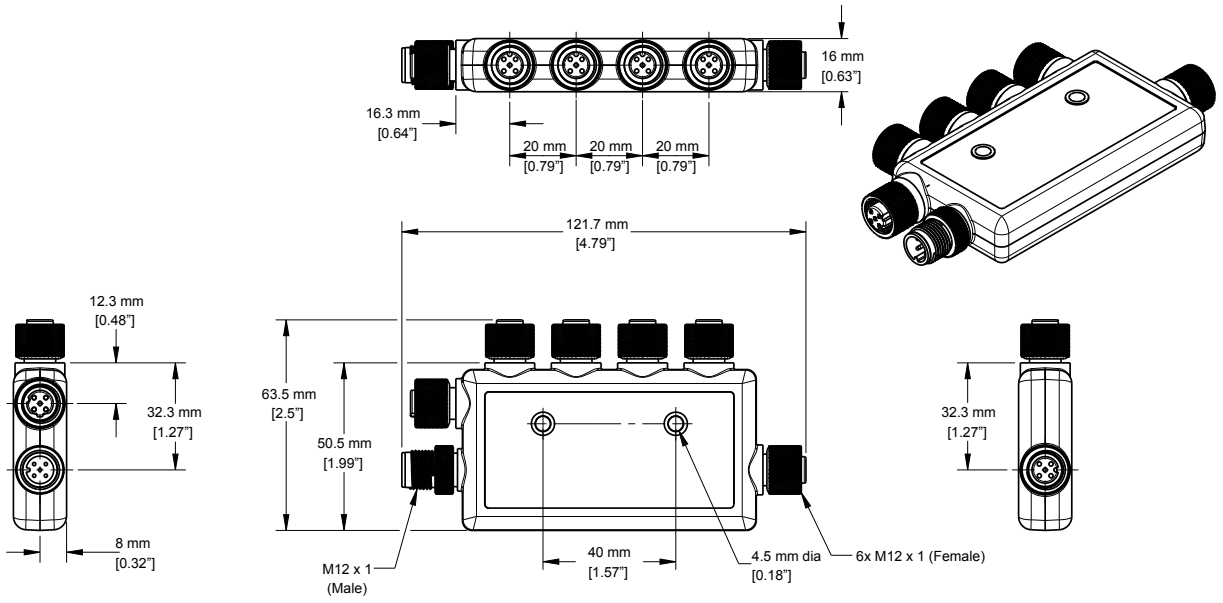

Accessories for the DXMR90-4K

Power Supplies

PSD-24-4—DC Power Supply, Desktop style, 3.9 A, 24 V DC, Class 2, 4-pin M12 quick disconnect (QD)
PSDINP-24-06—DC power supply, 0.63 Amps, 24 V DC, with DIN Rail Mount, Class I Division 2 (Groups A, B, C, D) Rated
PSDINP-24-13 —DC power supply, 1.3 Amps, 24 V DC, with DIN Rail Mount, Class I Division 2 (Groups A, B, C, D) Rated
PSDINP-24-25 — DC power supply, 2.5 Amps, 24 V DC, with DIN Rail Mount, Class I Division 2 (Groups A, B, C, D) Rated
PSW-24-1—DC power supply with multi-blade wall plug, 100–240 V AC 50/60 Hz input, 24 V DC 1 A output, UL Listed Class 2, 4-pin female M12 connector
PSWB-24-1—DC power supply with multi-blade wall plug,100–240 V AC 50/60 Hz input, 24 V DC 1 A output, UL Listed Class 2, barrel jack connector

SMBR90S

- Stainless steel bracket
- 4x M4-07 pemnuts (B)
- Includes 2x M4 stainless steel hex head screws and flat washers

Hole center spacing: A = 40, B = 20

Hole size: A = ø 5

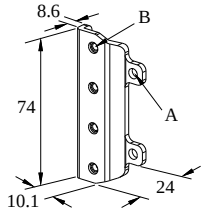

© Banner Engineering Corp.

4-pin M12 D-code to RJ45 Shielded Ethernet

Model	Length	Dimensions	RJ45 Pinout (Male)	M12 Pinout (Male)
STP-M12D-406	1.83 m (6 ft)	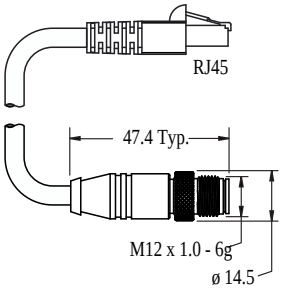	 1 = White/Orange 2 = Orange 3 = White/Blue 6 = Blue	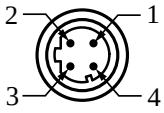 1 = White/Orange 2 = White/Blue 3 = Orange 4 = Blue
STP-M12D-415	4.57 m (15 ft)			
STP-M12D-430	9.14 m (30 ft)			

4-Pin Threaded M12 Cordsets—Double Ended

Model	Length	Style	Dimensions	Pinout
MQDEC-401SS	0.31 m (1 ft)	Male Straight / Female Straight	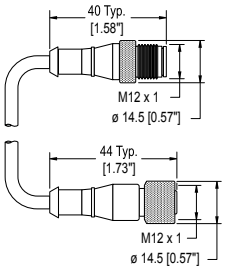	Female 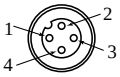 Male 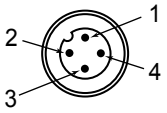 1 = Brown 2 = White 3 = Blue 4 = Black
MQDEC-403SS	0.91 m (2.99 ft)			
MQDEC-406SS	1.83 m (6 ft)			
MQDEC-412SS	3.66 m (12 ft)			
MQDEC-420SS	6.10 m (20 ft)			
MQDEC-430SS	9.14 m (30.2 ft)			
MQDEC-450SS	15.2 m (49.9 ft)			
MQDEC-403RS	0.91 m (2.99 ft)	Male Right-Angle / Female Straight	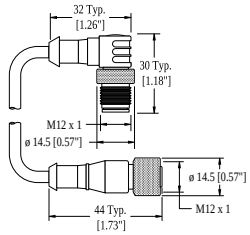	
MQDEC-406RS	1.83 m (6 ft)			
MQDEC-412RS	3.66 m (12 ft)			
MQDEC-420RS	6.10 m (20 ft)			
MQDEC-430RS	9.14 m (30.2 ft)			
MQDEC-450RS	15.2 m (49.9 ft)			
MQDEC-403RR	0.9 m (2.9 ft)	Male Right-Angle / Female Right-Angle	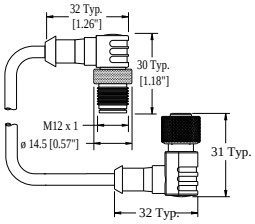	
MQDEC-406RR	1.8 m (5.9 ft)			
MQDEC-412RR	3.6 m (11.8 ft)			
MQDEC-420RR	6.1 m (20 ft)			

5-Pin Threaded M12 Cordsets—Single Ended

Model	Length	Style	Dimensions	Pinout (Female)
MQDC1-501.5	0.5 m (1.5 ft)	Straight	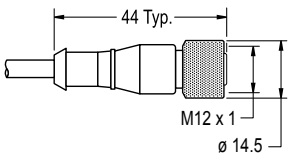	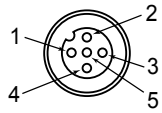 1 = Brown 2 = White 3 = Blue 4 = Black 5 = Gray
MQDC1-503	0.9 m (2.9 ft)			
MQDC1-506	2 m (6.5 ft)			
MQDC1-515	5 m (16.4 ft)			
MQDC1-530	9 m (29.5 ft)			
MQDC1-560	18 m (59 ft)			
MQDC1-5100	31 m (101.7 ft)			

Continued on page 7

© Banner Engineering Corp.

Continued from page 6

5-Pin Threaded M12 Cordsets—Single Ended				
Model	**Length**	**Style**	**Dimensions**	**Pinout (Female)**
MQDC1-506RA	2 m (6.5 ft)	Right-Angle	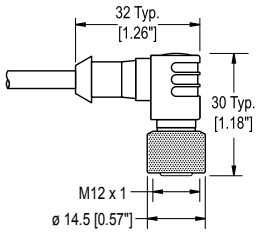	
MQDC1-515RA	5 m (16.4 ft)			
MQDC1-530RA	9 m (29.5 ft)			
MQDC1-560RA	19 m (62.3 ft)			

Banner Engineering Corp Limited Warranty

Banner Engineering Corp. warrants its products to be free from defects in material and workmanship for one year following the date of shipment. Banner Engineering Corp. will repair or replace, free of charge, any product of its manufacture which, at the time it is returned to the factory, is found to have been defective during the warranty period. This warranty does not cover damage or liability for misuse, abuse, or the improper application or installation of the Banner product.

THIS LIMITED WARRANTY IS EXCLUSIVE AND IN LIEU OF ALL OTHER WARRANTIES WHETHER EXPRESS OR IMPLIED (INCLUDING, WITHOUT LIMITATION, ANY WARRANTY OF MERCHANTABILITY OR FITNESS FOR A PARTICULAR PURPOSE), AND WHETHER ARISING UNDER COURSE OF PERFORMANCE, COURSE OF DEALING OR TRADE USAGE.

This Warranty is exclusive and limited to repair or, at the discretion of Banner Engineering Corp., replacement. **IN NO EVENT SHALL BANNER ENGINEERING CORP. BE LIABLE TO BUYER OR ANY OTHER PERSON OR ENTITY FOR ANY EXTRA COSTS, EXPENSES, LOSSES, LOSS OF PROFITS, OR ANY INCIDENTAL, CONSEQUENTIAL OR SPECIAL DAMAGES RESULTING FROM ANY PRODUCT DEFECT OR FROM THE USE OR INABILITY TO USE THE PRODUCT, WHETHER ARISING IN CONTRACT OR WARRANTY, STATUTE, TORT, STRICT LIABILITY, NEGLIGENCE, OR OTHERWISE.**

Banner Engineering Corp. reserves the right to change, modify or improve the design of the product without assuming any obligations or liabilities relating to any product previously manufactured by Banner Engineering Corp. Any misuse, abuse, or improper application or installation of this product or use of the product for personal protection applications when the product is identified as not intended for such purposes will void the product warranty. Any modifications to this product without prior express approval by Banner Engineering Corp will void the product warranties. All specifications published in this document are subject to change; Banner reserves the right to modify product specifications or update documentation at any time. Specifications and product information in English supersede that which is provided in any other language. For the most recent version of any documentation, refer to: www.bannerengineering.com.

For patent information, see www.bannerengineering.com/patents.

Document title: DXMR90-4K IO-Link Master Datasheet
Part number: 229731
Revision: D
Original Instructions
© Banner Engineering Corp. All rights reserved.

229731