# E20998

## Mounting set for reflectors

SYSTEM COMPONENT REFLECTOR

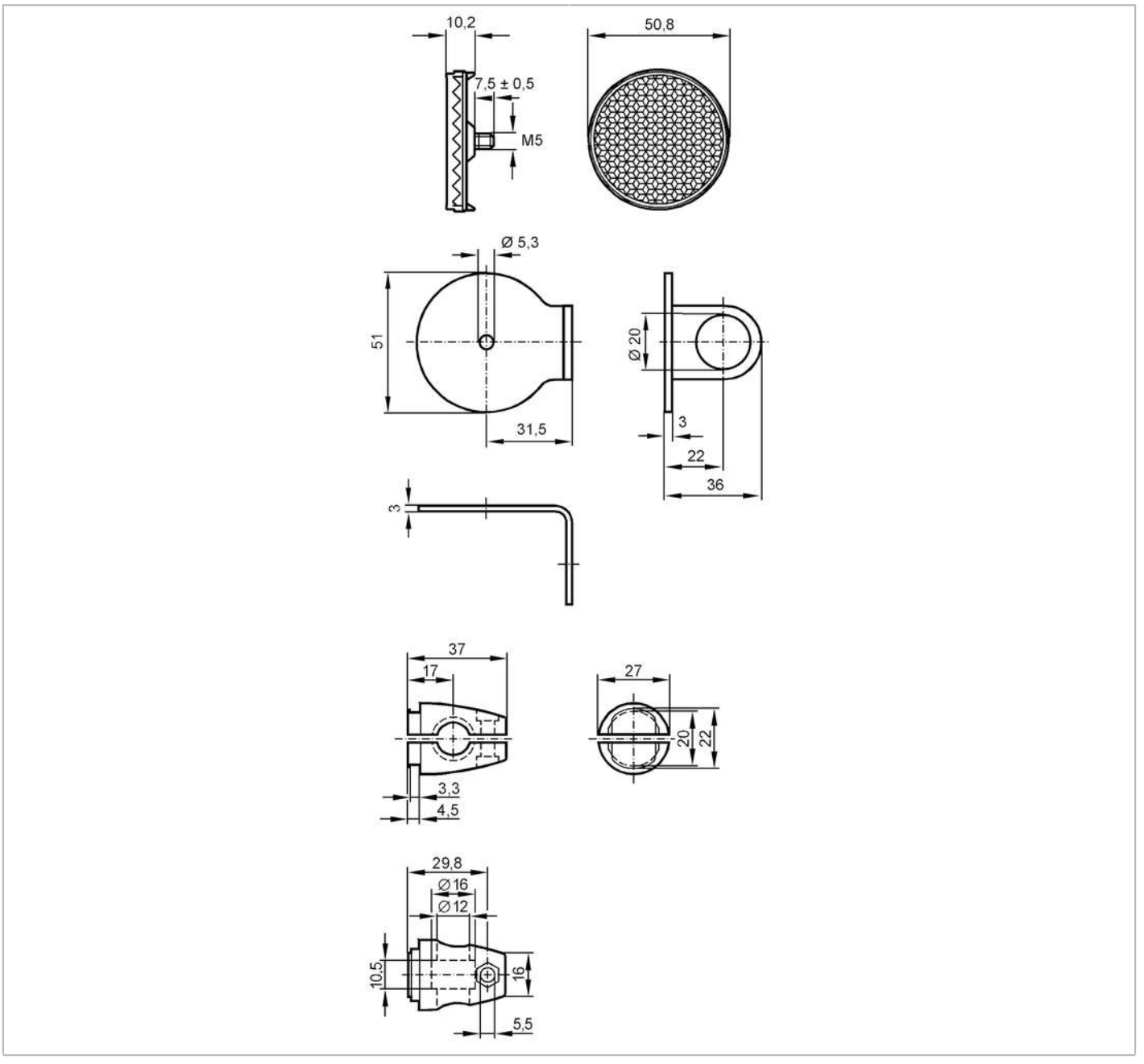


| | | |
|---|---|---|
| **Application** | | |
| Design | | clamp mounting, for reflector |
| **Mechanical data** | | |
| Weight | [g] | 248.5 |
| Type of mounting | | free-standing;  (M10) |
| Materials | | fixture: stainless steel (1.4571/316Ti ); Clamp: stainless steel (1.4408) |
| **Accessories** | | |
| Items supplied | | head cap screw: 1 x M10 x 55 |
| **Remarks** | | |
| Pack quantity | | 1 pcs. |