

BW 40.18
Front panel 48 x 48 mm



BG 40.27
Front panel with trim 55 x 55 mm

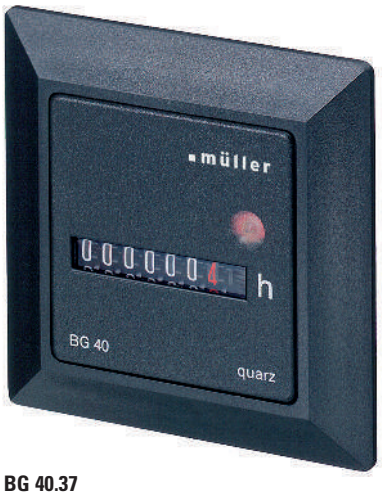

BG 40.37
Front panel with trim 72 x 72 mm

Save time

BW 40.18
BG 40.17

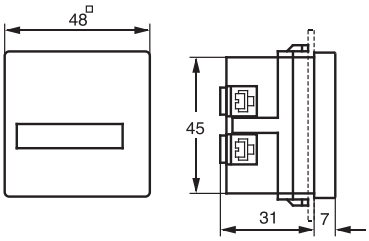

Order number	Version
BW 40.18	Alternating current
BG 40.17	Direct current

Housing colour

BW 40.28
BG 40.27

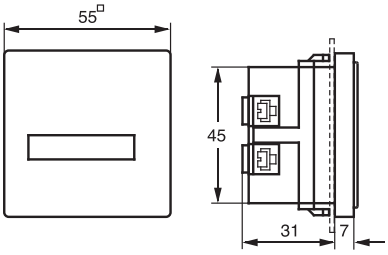

Order number	Version
BW 40.28	Alternating current
BG 40.27	Direct current

Housing colour

BW 40.38
BG 40.37

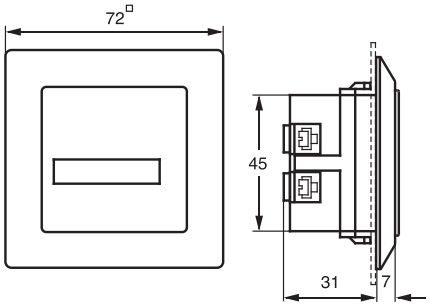

Order number	Version
BW 40.38	Alternating current
BG 40.37	Direct current

Housing colour

Highlights

- With retaining clip
- With universal connections
- Touch proof connections to VBG4
- Low-noise
- BW: Alternating current
  BG: Direct current quartz

Elapsed time counters BW/BG 40

for panel mounting, Alternating/Direct Current

Special features

- Large format numerals 4.4 mm in height
- Quick-fix retaining clip
- Easy to connect – screw terminals accessible from rear
- Attachments for other cutouts
- Ring seal for IP 54 – also seals front panel cutout
- BG: quartz stabilized
- BG: large voltage ranges

BW 40



BG 40



Technical data

	BW 40 Alternating current	BG 40 Direct current
Supply voltages (please state when ordering)	230 V, 50 Hz (standard) 115 V, 50 Hz 24 V, 50 Hz	12– 48 VDC (standard) 5– 24 VDC 36–120 VDC
Special voltages	on request	on request
Optional frequency	60 Hz	–
Voltage tolerance	±15%	±10%
Power consumption (real power)	0.15 W	approx. 20 mW at 12 VDC
Counter capacity	99,999 h.	999,999 h.
Accuracy of reading	0.01 h.	BG: 0.1 h.
Numeral height	4.4 mm	4.4 mm
Numeral colour	white, decimal figures red	white, decimal figures red
Operation indicator	fast-running wheel	
Permitted ambient temperature	–15°…+55°C	–10°…+50°C
Enclosure	self-extinguishing thermoplastic	
Switchboard flush mounting	housing to DIN EN 43700	
Type of connection	Universal: Screw, soldered and 6.3 x 0.8 mm AMP plug-type connections	
Type of protection	Front IP 50 to DIN EN 60529 (with ring seal 101.003.004: IP 54)	
Class of protection	II	III (up to 48 VDC) when fitted in accordance with regulations

Accessories

Retaining bracket for fixing to wall or distribution board
692.006



Trim 55 x 55 mm
190.003



Mask ∅ 72 (for flush mounting-∅ 60)
190.008



Ring seal for IP 54
101.003

Terminal cover for retaining bracket
003.007



Mask 72 x 72 mm
190.004



Mask ∅ 72 (for flush mounting-∅ 50,5)
190.009



Ratchet clamp for BW 40.28
101.001

Rights to technical amendments reserved.