



Model Number

RL31-54/73c/136

Retroreflective sensor
with 4-pin, M12 x 1 connector

Features

- Compact and stable housing
- Glare protected with polarization filter
- Highly visible LED
- Powerful push-pull output
- Protection class II

Dimensions

Operating principle	color
Retroreflective sensor with polarisation filter	green
Retroreflective sensor	blue
Diffusive mode sensor	white
Thru-beam sensor	grey
Diffusive mode sensor with background suppression	red

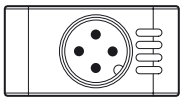

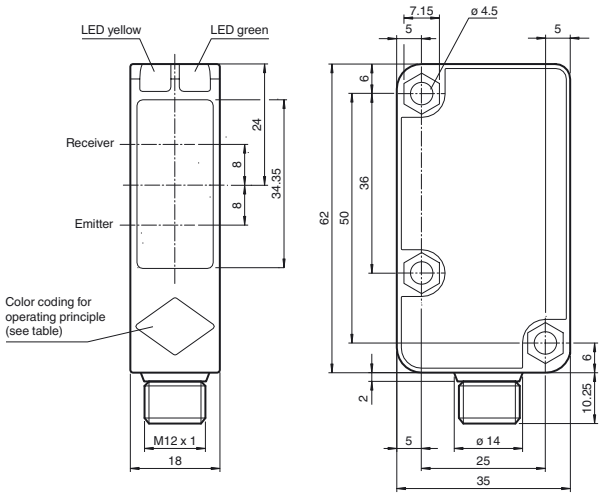

Electrical connection

Option:

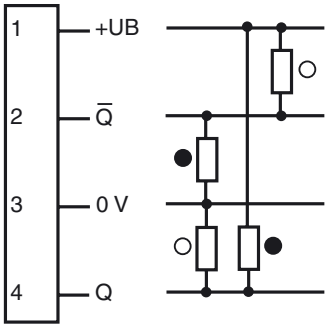

○ = Light on
● = Dark on

Pinout

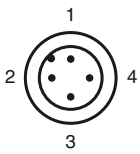

Indicators/operating means

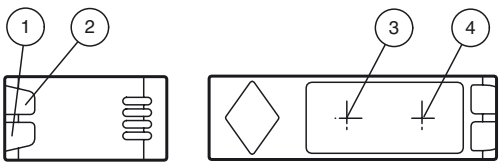

1	Operating display	green
2	Signal display	yellow
3	Emitter	
4	Receiver	

Release date: 2012-09-06 09:24 Date of issue: 2012-09-06 183811_eng.xml

Subject to modifications without notice
Copyright Pepperl+Fuchs

Pepperl+Fuchs Group www.pepperl-fuchs.com
USA: +1 330 486 0001 fa-info@us.pepperl-fuchs.com
Germany: +49 621 776-4411 fa-info@pepperl-fuchs.com
Singapore: +65 6779 9091 fa-info@sg.pepperl-fuchs.com

Technical data

General specifications		
Effective detection range		0 ... 9000 mm
Reflector distance		20 ... 9000 mm
Threshold detection range		12 m
Reference target		reflector C110-2
Light source		LED
Light type		modulated visible red light , 630 nm
Diameter of the light spot		approx. 200 mm at a distance of 6 m
Angle of divergence		3 °
Ambient light limit		50000 Lux ; according EN 60947-5-2
Functional safety related parameters		
$MTTF_d$		920 a
Mission Time (T_M)		20 a
Diagnostic Coverage (DC)		0 %
Indicators/operating means		
Operating display		LED green: power on
Function display		LED yellow: 1. LED lit constantly: signal > 2 x switching point (function reserve) 2. LED flashes: signal between 1 x switching point and 2 x switching point 3. LED off: signal < switching point
Electrical specifications		
Operating voltage	U_B	10 ... 30 V DC
Ripple		10 %
No-load supply current	I_0	≤ 20 mA
Output		
Switching type		dark on
Signal output		2 push-pull (4 in 1) outputs, short-circuit protected, reverse polarity protected
Switching voltage		max. 30 V DC
Switching current		max. 100 mA
Voltage drop	U_d	≤ 1.5 V
Switching frequency	f	≤ 500 Hz
Response time		≤ 1 ms
Ambient conditions		
Ambient temperature		-30 ... 55 °C (-22 ... 131 °F)
Storage temperature		-40 ... 70 °C (-40 ... 158 °F)
Mechanical specifications		
Protection degree		IP67
Connection		connector M12 x 1, 4-pin
Material		
Housing		plastic
Optical face		PMMA
Mass		24 g
Compliance with standards and directives		
Directive conformity		EMC Directive 2004/108/EC
Standard conformity		
Product standard		EN 60947-5-2:2007 IEC 60947-5-2:2007
Approvals and certificates		
Protection class		II , rated insulation voltage ≤ 250 V AC with pollution degree 1-2 according to IEC 60664-1 Output circuit basis insulation of input circuit according to EN 50178, rated insulation voltage 240 V AC
UL approval		cULus Listed, Class 2 Power Source, Type 1 enclosure
CCC approval		Products with a maximum operating voltage of ≤36 V do not bear a CCC marking because they do not require approval.

Accessories

OMH-RL31-01
Mounting bracket

OMH-RL31-02
Mounting bracket narrow

OMH-RL31-03
Mounting bracket narrow

OMH-RL31-04
Mounting aid for round steel ø 12 mm or sheet 1.5 mm ... 3 mm

OMH-RL31-05
Mounting bracket with M10 threaded rod

OMH-RL31-06
Stainless steel mounting bracket with adjustable half clamp on the side

V1-G-2M-PUR
Cable socket, M12, 4-pin, PUR cable

V1-W-2M-PUR
Cable socket, M12, 4-pin, PUR cable

Other suitable accessories can be found at www.pepperl-fuchs.com

Release date: 2012-09-06 09:24 Date of issue: 2012-09-06 183811_eng.xml

Subject to modifications without notice
Copyright Pepperl+Fuchs
Pepperl+Fuchs Group www.pepperl-fuchs.com
USA: +1 330 486 0001 fa-info@us.pepperl-fuchs.com
Germany: +49 621 776-4411 fa-info@pepperl-fuchs.com
Singapore: +65 6779 9091 fa-info@sg.pepperl-fuchs.com
PEPPERL+FUCHS SENSING YOUR NEEDS

Curves/Diagrams

Characteristic response curve

RL31-54/.../136

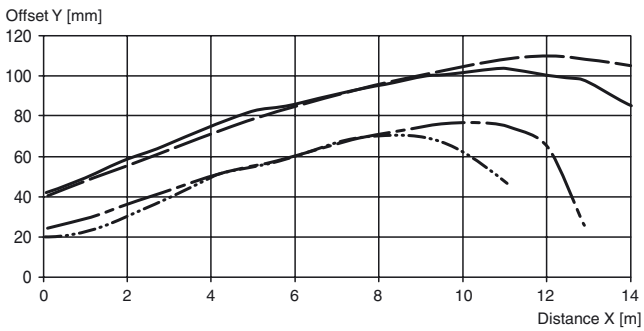

Relative received light strength

RL31-54/...
RLK31-54/...

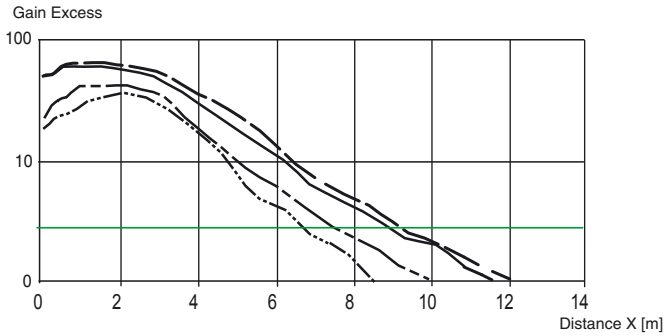

Release date: 2012-09-06 09:24 Date of issue: 2012-09-06 183811_eng.xml