- **Connection: 6 mm, 1/4“ Push In Fitting**
- **Accessible Manual Override**
- **Wide range of operating pressure**
- **Normally open/ Normally closed option**



Technical features

Medium:
Compressed air
(Lubricated or non Lubricated
Max. pressure:
20 bar (290 psi)
Recommended Operating pressure:
0,7 ... 17 bar (10 ... 247 psi)

Port size:
6 mm, 1/4” PIF
Drain Operation (Normally open):
Pressure to close drain:
> 0,3 bar (4,35 psi)
Pressure to open drain:
< 0,2 bar (2,9 psi)
Minimum air flow to close drain:
0,6 dm^3/s
Drain Operation (Normally closed):
Pressure to open drain:
> 1 bar (14,5 psi)
Pressure to close drain:
0 bar (0 psi)
Minimum air flow to open drain:
0 dm^3/s

Ambient/Media temperature:
+1,5 ... +80°C (+35 ... +176°F)

Material:
Main Body, Manual Override, Bonnet, Piston, Retaining Ring: Acetal
Lever: Glass filled acetal
Float: Orgalloy RS6000
Gaskets: Silicon free nitrile rubber
Valve Body:
Glass filled polypropylene
Valve Seat: Acetal
Spring, Filter Screen: Stainless steel
PIF Collet: Nickel plated brass

IMI Precision Engineerig recommend using IMI Precision Engineering specified tube tolerances and minimum bend radius where the condensate is piped away. This helps avoid blockage of the downstream system. Also the sealing gasket must be correctly assembled onto the autodrain unit before attaching to the bowl.

Technical data

Symbol	Port size	Function	Model
	6 mm	Normally open	6000-50
	1/4”	Normally open	6000-51
	6 mm	Normally closed	6000-52

Our policy is one of continued research and development. We therefore reserve the right to amend, without notice, the specifications given in this document. (2017 - 9245a) © 2015 IMI International s.r.o.

Dimensions

Dimensions in mm
Projection/First angle

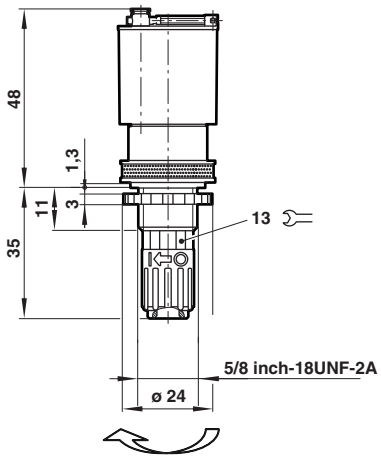

Warning

These products are intended for use in industrial compressed air systems only. Do not use these products where pressures and temperatures can exceed those listed under »**Technical features/data**«.
Before using these products with fluids other than those specified, for non-industrial applications, life-support systems or other applications not within published specifications, consult
IMI Precision Engineering, IMI International s.r.o.

Through misuse, age, or malfunction, components used in fluid power systems can fail in various modes. The system designer is warned to consider the failure modes of all component parts used in fluid power systems and to provide adequate safeguards to prevent personal injury or damage to equipment in the event of such failure.
System designers must provide a warning to end users in the system instructional manual if protection against a failure mode cannot be adequately provided.
System designers and end users are cautioned to review specific warnings found in instruction sheets packed and shipped with these products.

Our policy is one of continued research and development. We therefore reserve the right to amend, without notice, the specifications given in this document. (2017 - 9245a) © 2015 IMI International s.r.o.