OY116S

Safety light grid

OYA0910-04-4-12-P-1

For 8-pole sockets the core colours are not standardised.
Please note the wiring of the sensor and the sockets (see data sheet).

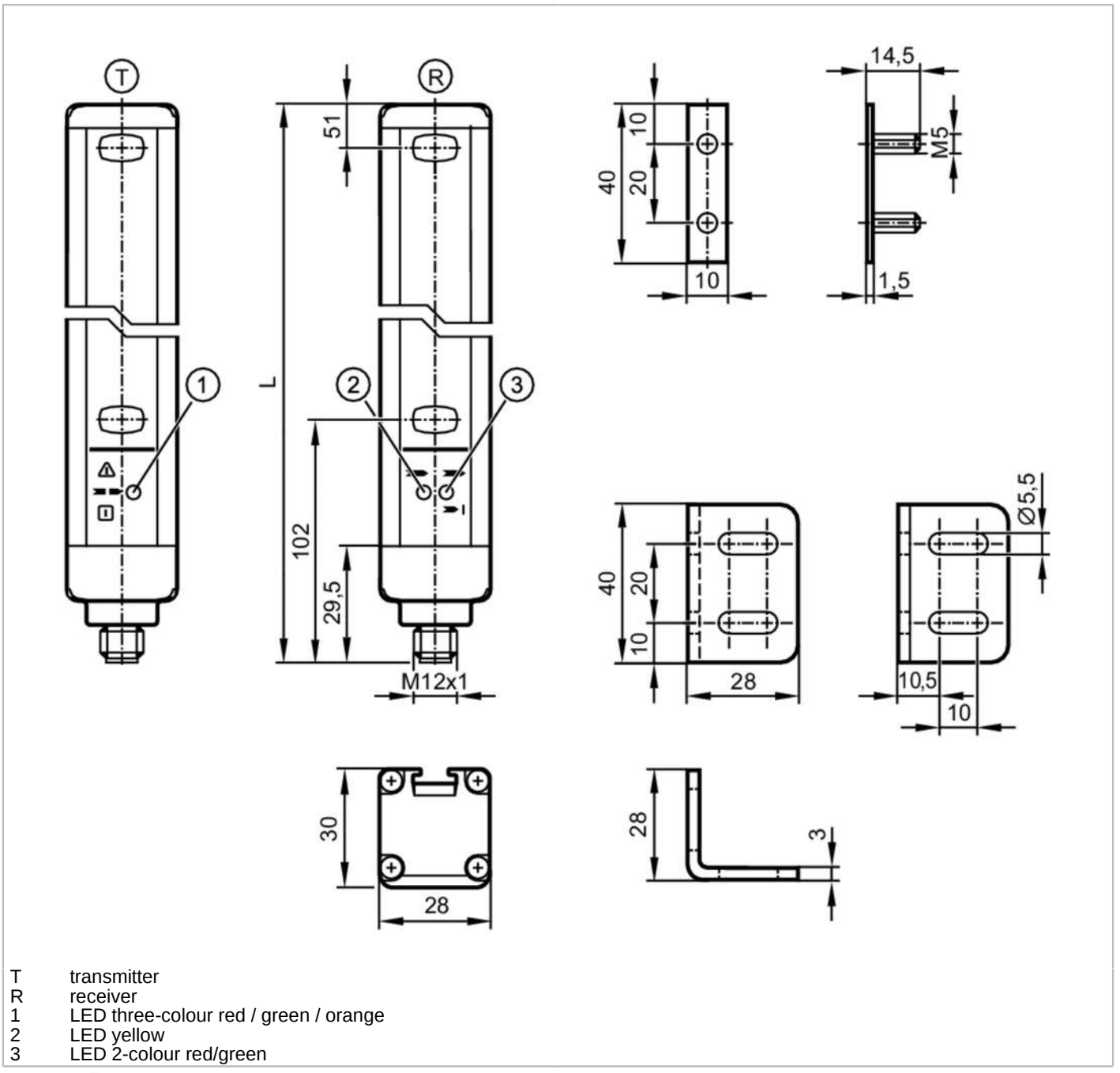

T transmitter
R receiver
1 LED three-colour red / green / orange
2 LED yellow
3 LED 2-colour red/green

Product characteristics	
Type of light	infrared light
Electrical design	PNP
Protection	IP 65; IP 67
Application	
Protective function	access prevention body protection

OY116S

Safety light grid

OYA0910-04-4-12-P-1

Electrical data		
Operating voltage tolerance	[%]	20
Operating voltage	[V]	24 DC
Protection class		III
Reverse polarity protection		yes
Power-on delay time	[s]	< 2
Type of light		infrared light
Wave length	[nm]	950
Receiver		
Current consumption	[mA]	83
Transmitter		
Current consumption	[mA]	42
Outputs		
Electrical design		PNP
Number of OSSD outputs		2
Max. current load per OSSD output	[mA]	400; (24 V)
Short-circuit protection		yes
Detection zone		
Protected area height	[mm]	910
Number of beams		4
Protection area width (low light intensity)	[m]	0...4
Protection area width (high light intensity)	[m]	3...12
Response times		
Response time	[ms]	3
Operating conditions		
Applications		class C to EN 60654-1 weatherproof application
Ambient temperature	[°C]	-10...55
Storage temperature	[°C]	-20...70
Max. relative air humidity	[%]	95
Protection		IP 65; IP 67
Tests / approvals		
EMC		IEC 61496-1
Shock resistance		IEC 61496-1
Vibration resistance		IEC 61496-1
Safety classification		
ESPE type (IEC 61496-1)		4
Complies with the requirements		ISO 13849-1: 2015 category 4, PL e
		IEC 61508 SIL 3
		IEC 62061 SIL 3
Mission time TM	[h]	175200
PFH	[1/h]	8,2E-09

OY116S

Safety light grid

OYA0910-04-4-12-P-1

Mechanical data		
Weight	[g]	3465
Dimensions	[mm]	1053 x 28 x 30
Materials		housing: aluminium; front pane: PC
Length L	[mm]	1053

Displays / operating elements	
Display	LED, yellow
	LED, green
	LED, red

Accessories	
Items supplied	mounting bracket: 4
	slot nuts: 4
	Nuts

Remarks	
Pack quantity	1 pcs.

Electrical connection - receiver

Connector: 1 x M12; coding: A; Maximum cable length: 100 m; for wire cross-section 0.34 mm²



Connection

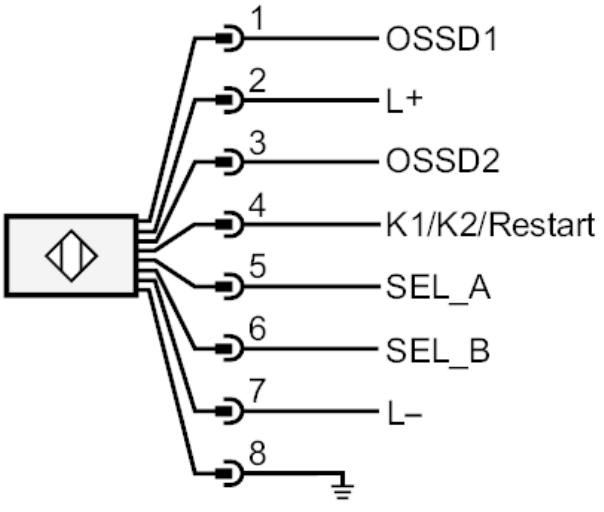

OY116S

Safety light grid

OYA0910-04-4-12-P-1

Electrical connection - transmitter

Connector: 1 x M12; coding: A

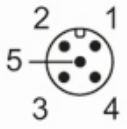

Connection

