

- **High Life Cycle**
- **High Temperature Capability**
- **IP65 Dust Proof, Water Proof (Intense Spray)**
- **Compact design**

Variohm IPL linear sensors combine a robust and sealed membrane type linear potentiometer element in a convenient support housing that makes installation straightforward. The housing is made of a durable anodised aluminium frame and a molded wiper. The compact IPL series, available from 12.5 mm to 1000 mm stroke provides accurate linear measurement feedback for a wide range of applications. It is capable of operation in harsh environments with a temperature range of -40° C to + 85° C.

Specifications	
Mechanical	
Typical Life Cycle (membrane element)	>10 million
Actuation force	3.0 N average
Environmental	
Operating temperature	-40°C to +85°C
Humidity	No affect @ 95% RH, 24hrs 60°C
IP rating of active area	IP65
Electrical	
Resistance - Standard	10 kΩ (lengths >300 = 20 kΩ)
Resistance - Custom	5kΩ to 100 kΩ
Resistance Tolerance	±20%
Effective Electrical Travel	12.5 to 1200 mm
Linearity (Independent)	±3% (±1% on request)
Repeatability	+/- 0.5 mm
Power Rating (depending on size, varies with length and temperature)	1 Watt max. @ 25°C, 0.5 Watt recommended

Dimensions - IPL

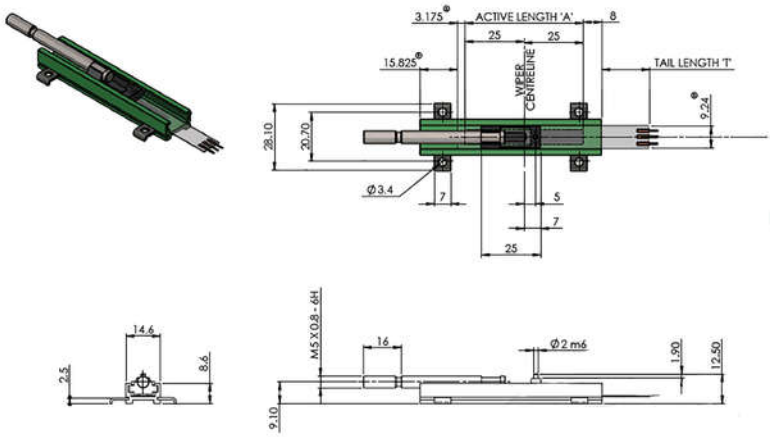

Dimension A - Active Length in mm	25.00	50.00	100.00	200.00	500.00
Dimension B - Shaft length	60	85	135	235	535
Dimension T - Tail Length in mm	12.7 mm	24.9mm			

Wiring

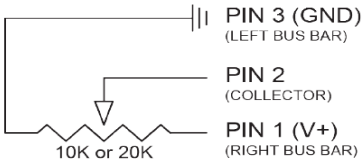

Membrane cross section

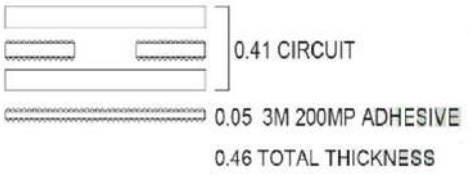

Optional Accessoires: Shaft for IPL

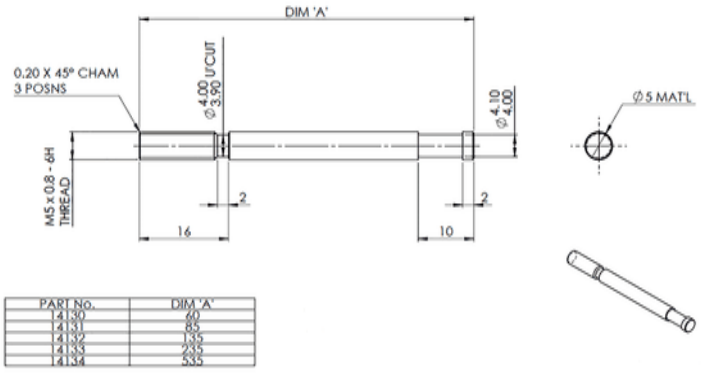

Part Number	Order No
IPL-0025 60 mm Schaft	14130
IPL-0050 85 mm Schaft	14131
IPL-0100 135 mm Schaft	14132
IPL-0200 235 mm Schaft	14133
IPL-0500 535 mm Schaft	14134

Ordering information

(Please use the characters in the chart below to create your product code)

Sample Code IPL - 0050 - 103 - 3% - ST

Active length mm	
0012	12.5
0025	25
0050	50
0100	100
0150	150
0170	170
0200	200
0300	300
0400	400
0500	500
0750	750
1000	1000

Resistance	
103	10 KΩ (active length <300)
203	20 KΩ (active length >300)

Independant Linearity	
3%	±3%
	(±1% on request)

Connectors	
ST	Solder Tab
MP	Male Pins
RH	Receptacles w/Plain Housing
RL	Receptacles w/Latch Housing
RD	Receptacles w/Detent Housing



Crimpflex Solder Tab (ST)



Crimpflex Short Pins (MP)



Crimpflex female connector strips with flat housing (RH)



Crimpflex female connector with snab housing (RL)



Crimpflex female connector with housing & locking bolt (RD)