AV series

Security pushbutton switches •
Ø 30 mm • illuminated momentary NC/NO



DISTINCTIVE FEATURES

Large actuator
With illuminated ring
Momentary NC/NO
Solder lug, flying lead or cable terminals
Marking available on request

ENVIRONMENTAL SPECIFICATIONS

- Optional front panel sealing : IP67 according to IEC 60529
- Robustness : IK06 according to EN 62262 (1 joule)
- Operating temperature : -30 °C to +85 °C (-22 °F to +185 °F)

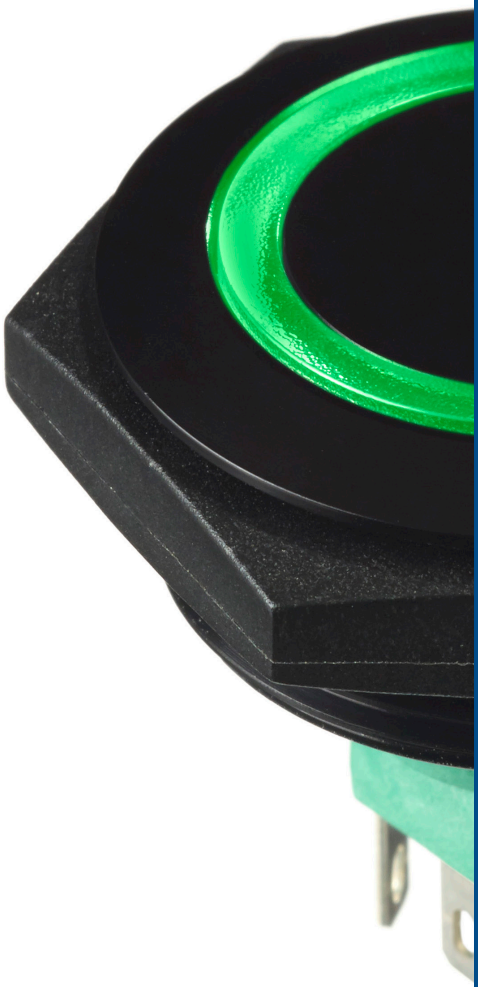

ELECTRICAL SPECIFICATIONS

- Max. current/voltage rating with resistive load : 1 A 30 VDC
- LED voltage : 12 VDC, 24 VDC or 48 VDC
  If not supplied by APEM, a resistor must be series-connected by the user : see LED component specifications below.
- Initial contact resistance : 100 mΩ max.
- Insulation resistance : 10 MΩ min. at 500 VDC
- Dielectric strength : 500 Vrms 50 Hz min. between terminals
  1,000 Vrms 50 Hz min. between terminals and frame
- Electrical life : 250,000 cycles at full load

LED COMPONENT SPECIFICATIONS

LED color	Forward current	Typ. forward voltage	Max. forward voltage
Blue	20 mA	3.3 V	3.8 V
Green	20 mA	4 V	4.5 V
Yellow	20 mA	2 V	2.5 V
Red	20 mA	1.95 V	2.5 V
White	20 mA	3.3 V	4 V
Amber	20 mA	2.3 V	2.8 V
Red / Green	20 mA	2.2 V / 3.2 V	2.8 V / 4 V
Red / Green / Blue	20 mA	2.2 V / 3.2 V / 3.3 V	2.8 V / 4 V / 4 V

$$\text{Resistor value} = \frac{\text{supply voltage - LED forward voltage}}{\text{LED forward current}}$$

The company reserves the right to change specifications without notice.

AV series

Security pushbutton switches •
Ø 30 mm • illuminated momentary NC/NO

GENERAL SPECIFICATIONS

- Travel : 2.5 mm ± 0.3 mm (.003)
- Operating force : 5 N ± 2 N
- Torque : 10 Nm max.
- Panel thickness : 1 (.039) to 6 mm (.236) max.
- Low level or mechanical life : 1,000,000 cycles
- Hand soldering : 350 °C (662 °F), 5 seconds max.

MATERIALS

- Case : polyamide, glass filled
- Contacts : silver
- Bushing : see following pages
- Actuator : see following pages
- Elastomeric membrane : silicone
- LED

ELECTRICAL FUNCTIONS

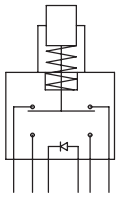

NC/NO

MOUNTING

- Panel cut-out : Ø 30.2 mm (1.189)
- Min. pitch for matrix mounting :
  44 mm x 44 mm (1.732x1.732)

IP67 PANEL CUT-OUT (K OPTION)

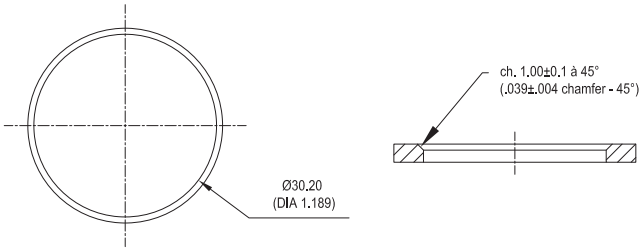

CONNECTIONS

WIRE COLORS (F OUTPUT)

1	Red	Red LED+
2	Green	Green LED+
3	Blue	Blue LED+
4	Black	LED GND
5	Orange	NO
6	Orange	NO

CABLE COLORS (C OUTPUT)

1	White	Red LED+
2	Brown	Green LED+
3	Green	Blue LED+
4	Yellow	LED GND
5	Pink	NO
6	Grey	NO

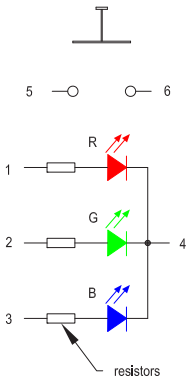

AV series

Security pushbutton switches •
Ø 30 mm • illuminated momentary NC/NO

BUILD YOUR PART NUMBER

BASIC PART NUMBER

AV					
SERIES	BUSHING DIAMETER	LED COLORS	LED RESISTORS	CONTACTS	TERMINALS

BUSHING DIAMETER

5	30 (1.181)

LED COLORS

0	No LED
1	Blue
V	Green
5	Yellow
6	Red
7	White
9	Amber
2	Red / Green
R	Red / Green / Blue

LED RESISTORS

0	No resistor supplied
1	12 VDC resistor
2	24 VDC resistor
4	48 VDC resistor

CONTACTS

2	Silver

TERMINALS

2	Solder/ quick-connect
F	Flying leads
C	Cable

OPTIONS

FLYING LEAD PROTECTION		RING COLORS		BUSHING AND ACTUATOR MATERIALS	SEALING

FLYING LEAD PROTECTION

0	No protection and/or no flying leads
1	Heat-shrink sleeves
2	Tube + epoxy

RING COLORS

1	Blue	4	Grey*	7	Opal white
2	Black*	5	Yellow	8	Translucent
3	Green	6	Red	9	Orange

*non-illuminated only

SEALING

Blank	No sealing
K	Sealed to IP67

FLYING LEAD/CABLE LENGTH

000	No flying leads / no cable
020	Length 20 cm (std)
XXX	Length in centimeters

BUSHING AND ACTUATOR MATERIALS

00	Nickel plated brass
4B	Stainless steel 316
A0	Aluminum & natural anodizing
A1	Aluminum & blue anodizing
A2	Aluminum & black anodizing
A3	Aluminum & green anodizing
A5	Aluminum & gold anodizing
A6	Aluminum & red anodizing

Other : on request.

ABOUT THIS SERIES

On the following pages, you will find successively basic part numbers of switches and options in the same order as in above chart

Notice: please note that not all combinations of above numbers are available. Refer to the following pages for further information.

Mounting accessories: standard hardware supplied : 1 hex nut. Standard and special hardware is presented in the "Hardware" section of website.

AV series

Security pushbutton switches • Ø 30 mm • illuminated momentary NC/NO

FLAT ACTUATOR - SOLDER LUG TERMINALS



Illuminated*
AV5•022

Non-illuminated
AV50022

* Select LED color on previous page - No LED resistor supplied on this model.

Plastic hex nut 36 (1.417) across flats

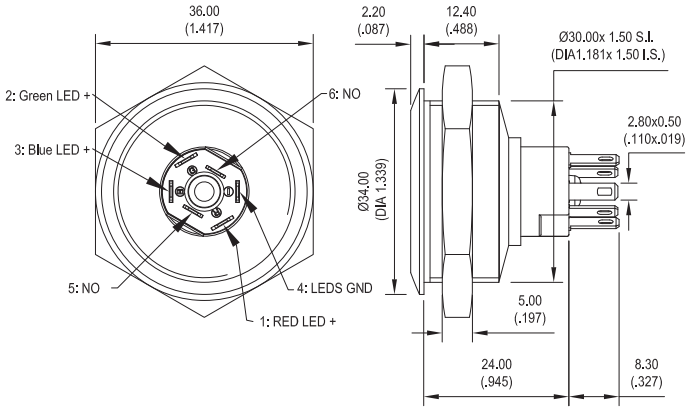

FLAT ACTUATOR - FLYING LEAD TERMINALS



Illuminated*
AV5••2F

Non-illuminated
AV5002F

* Select LED color & resistor on previous page.

Plastic hex nut 36 (1.417) across flats

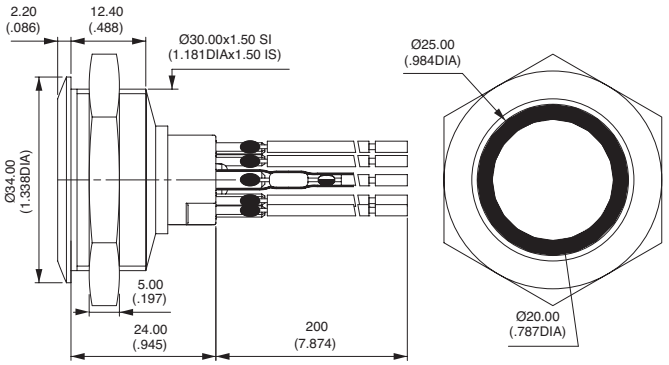

Wire colors : black: NC, orange: NO, red: LED anode (+), blue : LED cathode (-)

FLAT ACTUATOR - CABLE TERMINALS



Illuminated*
AV5••2C

Non-illuminated
AV5002C

* Select LED color & resistor on previous page.

Plastic hex nut 36 (1.417) across flats

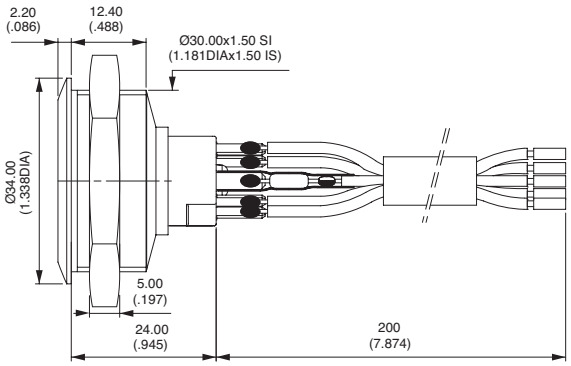

AV series

Security pushbutton switches •
Ø 30 mm • illuminated momentary NC/NO

FLYING LEAD PROTECTION

BASIC P/N

0	No protection and/or no flying leads
1	Heat-shrink sleeves
2	Tube + epoxy

FLYING LEAD/ CABLE LENGTH

BASIC P/N

000	No flying leads / no cable
020	Length 20 cm (standard)
XXX	Length in centimeters

RING COLORS

BASIC P/N

1	Blue
2	Black *
3	Green
4	Grey *
5	Yellow
6	Red
7	Opal white (std)
8	Translucent
9	Orange

* non-illuminated only

BUSHING/ACTUATOR MATERIALS

BASIC P/N

00 (std)	Nickel plated brass
4B	Stainless steel 316
A0	Aluminum & natural anodizing
A1	Aluminum & blue anodizing
A2	Aluminum & black anodizing
A3	Aluminum & green anodizing
A5	Aluminum & gold anodizing
A6	Aluminum & red anodizing

Other : on request.

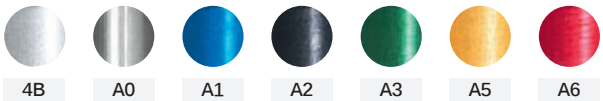

SEALING

BASIC P/N

Blank	No sealing
K	Front panel sealing to IP67

OPTION K



① - internal membrane

② - external gasket