NJ 306 ECP

Popular item
SKF Explorer

Dimensions

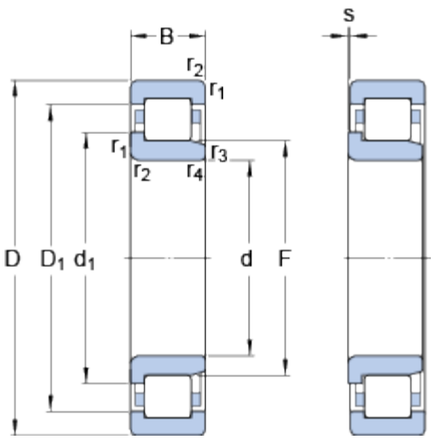

d		30	mm
D		72	mm
B		19	mm
d_1	≈	45	mm
D_1	≈	58.35	mm
F		40.5	mm
$r_{1,2}$	min.	1.1	mm
$r_{3,4}$	min.	1.1	mm
s	max.	1.4	mm

Abutment dimensions

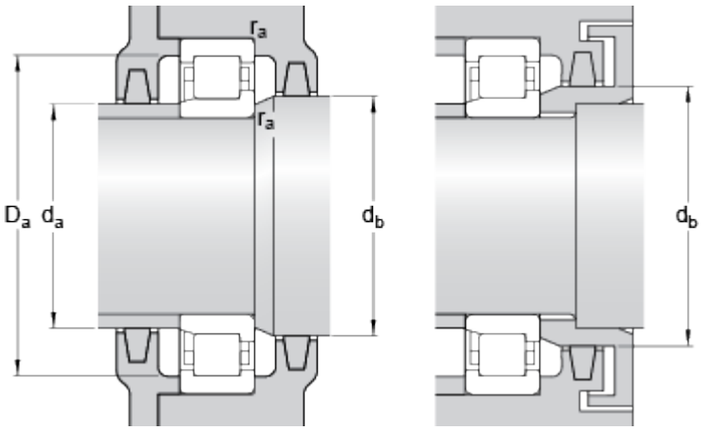

d_a	min.	37	mm
d_a	max.	39	mm
d_b	min.	47	mm
D_a	max.	65.1	mm
r_a	max.	1	mm

Calculation data

Basic dynamic load rating	C	58.5	kN
Basic static load rating	C_0	48	kN
Fatigue load limit	P_u	6.2	kN
Reference speed		11000	r/min
Limiting speed		12000	r/min
Calculation factor	k_r	0.15	
Limiting value	e	0.2	
Axial load factor	Y	0.6	

Mass

Mass bearing	0.37	kg

Associated products

Angle ring	HJ 306 EC