RAFIX 16, illuminated selector switch, square collar, 2 x 40°, momentary contact function, illuminable

DISCONTINUED



fields of application

- Measurement-control-regulation
- Electrical engineering
- Mechanical and system engineering
- Industrial robots

special features

- Selector switch in various rotation angle variants
- Transparent rotary handle marking, illuminable
- Robust - also suitable for operation with gloves
- Close mounting of actuators possible due to axial wiring from behind
- Degree of protection: IP 65 at the front
- Mounting diameter 16.2 mm
- Separate switching elements UNIVERSAL required
- Switching elements with silver contacts (max. 250 V / 6 A) or gold contacts (max. 35 V / 0.25 A)
- Connection types switching elements: screw connection, plug-in connection, PCB plug-in socket
- The switching elements are snapped on and can be removed again by turning.

description

RAFIX control devices are modular units consisting of several parts. In the RAFIX 16 family, they always consist of an actuating element and a switching element, or of an indicator lamp and a lamp socket. Actuating elements (such as pushbuttons or emergency stop actuators) have the specified tactility, reset and function only when assembled with the appropriate switching elements. For illuminated actuators, please use switching elements with lamp socket.

With RAFIX 16 actuators, you can choose between three collar shapes: round, square or square side-by-side, where the pushbuttons can be lined up seamlessly. The mounting diameter is 16.2 mm according to the standard. The anti-rotation lug can be easily removed with a screwdriver if necessary.

technical data

general

Collar shape	square
Operating temperature, min.	-25 °C
Operating temperature, max.	70 °C
Storage temperature, min.	-40 °C

The information in this data sheet only contains general descriptions and / or performance features, which may not apply precisely as described to the respective application, and which my change due to further product enhancements. The technical data, illustrations and other information about our products are the mere results of individual technical testing. These descriptions and other product features are only binding if they expressly agreed upon at the time of the conclusion of a binding contract. In all other cases, we reserve the right to make technical changes as well as changes of availability. Pictures and other graphic illustrations are approximations only. All product names may be trademarks or brand names of the RAFI Group or any other sub-supplier of RAFI. The use of such by any third parties for their own purposes may infringe the rights of the respective entity holding those rights.

RAFI GmbH & Co. KG

Ravensburger Str. 128-134
88276 Berg / Ravensburg
Germany
www.rafi-group.com,
info.headquarters@rafi-group.com

Storage temperature, max.	85 °C
illuminated	Yes
Packaging	Box
Packaging unit	2 pcs.
net weight	8.4 g
Operating life	30,000 cycles
B10	40,000 cycles
Degree of protection, front side, according to DIN EN 60529	IP65
Environment resistance	IEC 60068-2-14 IEC 60068-2-30 IEC 60068-2-33 IEC 60068-2-78
MOQ order	10 pcs.
RoHS compliant	Yes
REACH compliant	Yes

direct links

RAFI eCatalog

mounting diameters

Outside dimension, length	24.95 mm
Outside dimension, width	24.95 mm
Outside dimension, height	36.3 mm
Mounting hole	16.2 mm
Mounting depth	44.7 mm
Installation height	17.1 mm
Grid, min.	25 x 25 mm
Collar dimension	24,95 x 24,95 mm

mechanical data

Actuation function	momentary contact function
Operating torque, max.	1.3 Nm
Rotating angle	2 x 40°
Fixing	Threaded ring
Threaded ring torque, max.	1.2 Nm

The information in this data sheet only contains general descriptions and / or performance features, which may not apply precisely as described to the respective application, and which my change due to further product enhancements. The technical data, illustrations and other information about our products are the mere results of individual technical testing. These descriptions and other product features are only binding if they expressly agreed upon at the time of the conclusion of a binding contract. In all other cases, we reserve the right to make technical changes as well as changes of availability. Pictures and other graphic illustrations are approximations only. All product names may be trademarks or brand names of the RAFI Group or any other sub-supplier of RAFI. The use of such by any third parties for their own purposes may infringe the rights of the respective entity holding those rights.

RAFI GmbH & Co. KG

Ravensburger Str. 128-134
88276 Berg / Ravensburg
Germany
www.rafi-group.com,
info.headquarters@rafi-group.com

drawings

Dimensioned drawing

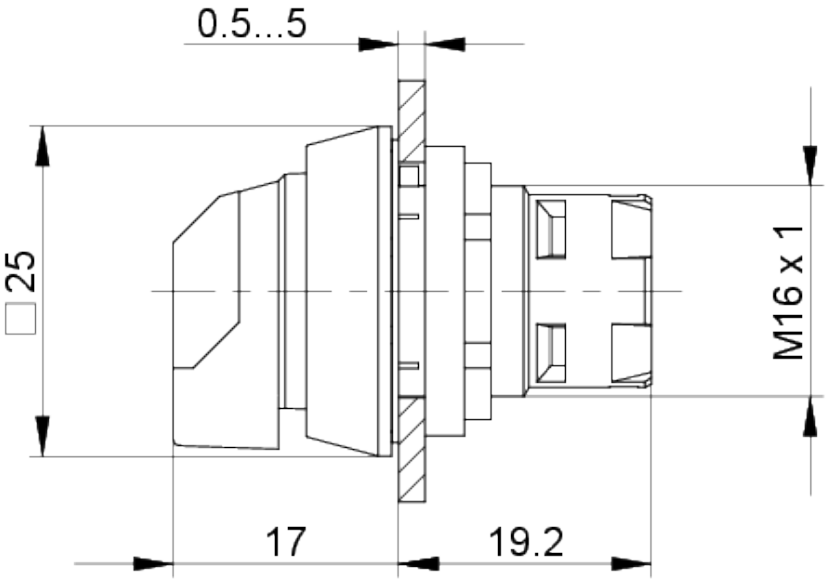

Mounting hole drawing

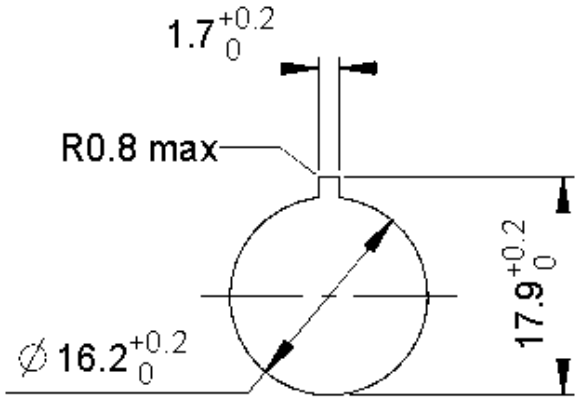

The information in this data sheet only contains general descriptions and / or performance features, which may not apply precisely as described to the respective application, and which my change due to further product enhancements. The technical data, illustrations and other information about our products are the mere results of individual technical testing. These descriptions and other product features are only binding if they expressly agreed upon at the time of the conclusion of a binding contract. In all other cases, we reserve the right to make technical changes as well as changes of availability. Pictures and other graphic illustrations are approximations only. All product names may be trademarks or brand names of the RAFI Group or any other sub-supplier of RAFI. The use of such by any third parties for their own purposes may infringe the rights of the respective entity holding those rights.

RAFI GmbH & Co. KG

Ravensburger Str. 128-134
88276 Berg / Ravensburg
Germany
www.rafi-group.com,
info.headquarters@rafi-group.com